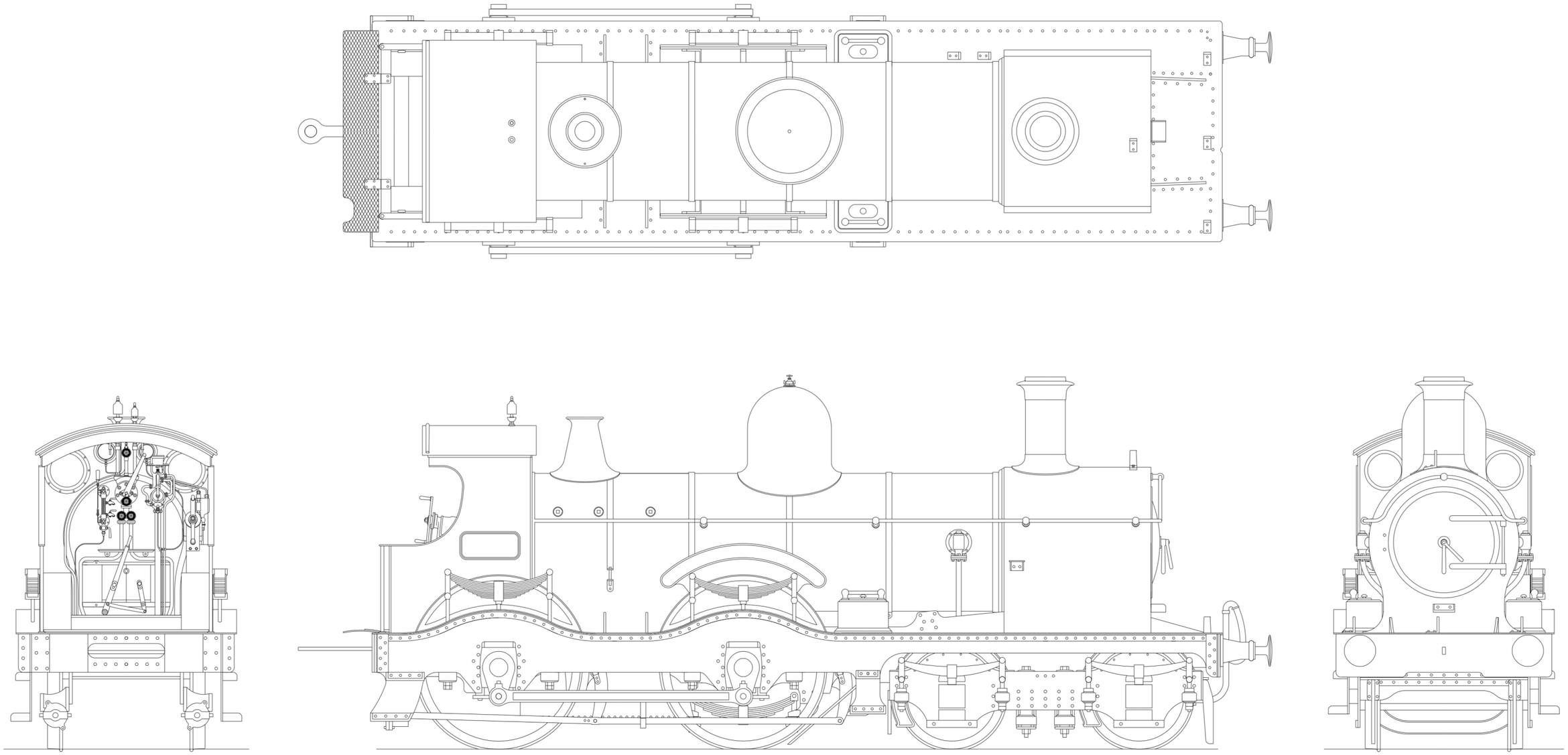

Fig 1. S4 Boiler Duke Class GA

Parallel chimney without capuchon, narrow cab, boiler clack boxes, fluted coupling rods, shallow frame bogie with splashers.

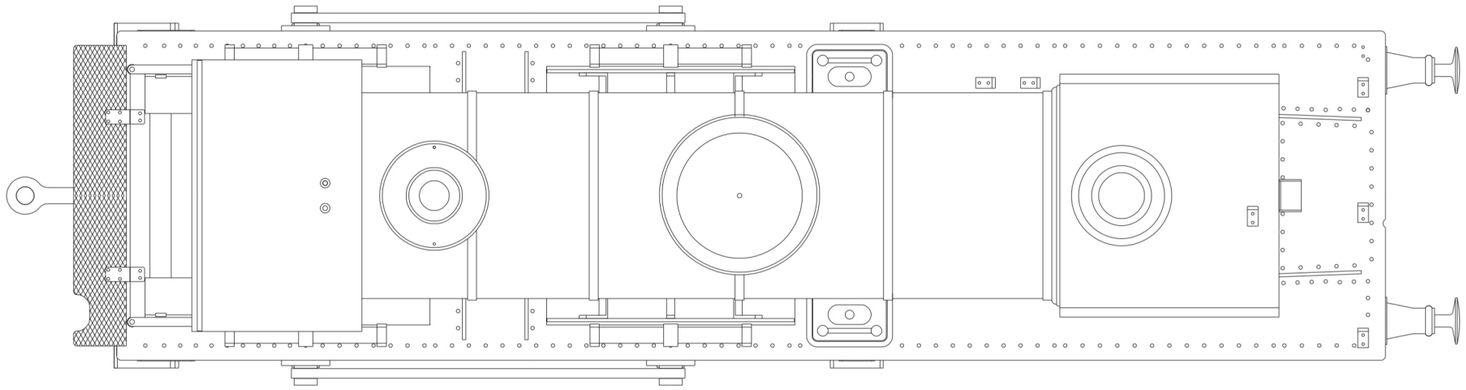

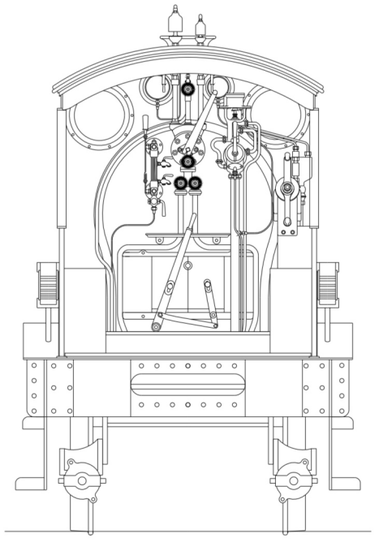

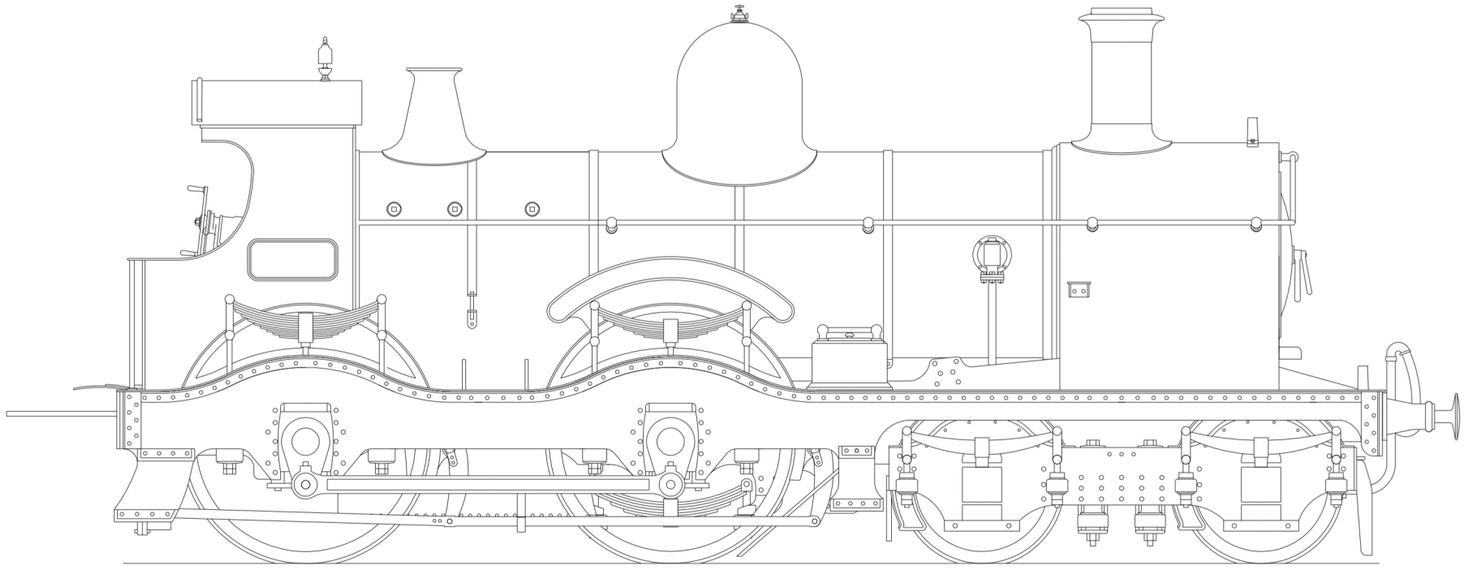

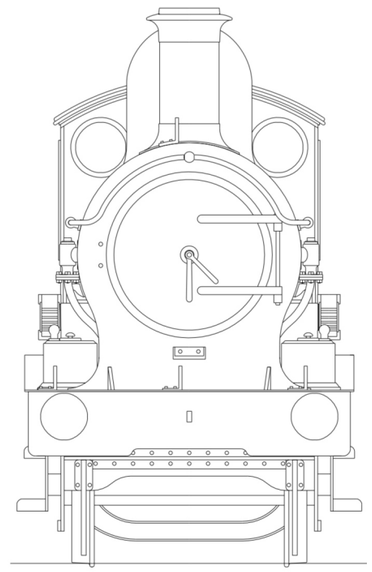

Fig 2. B4 Boiler Duke Class GA

Circa 1935, wide cab with L shaped windows, backplate clack boxes, plain coupling rods, deep frame bogie, tapered chimney, splasher and bogie beading removed, ATC fitted.

BOGIE CONSTRUCTION

COUPLING RODS.

The coupling rods should now be made up so that we can use them as a jig for fitting the front hornblocks accurately in place. First drill out all the crankpin holes, to a convenient size, which is undersize for the crankpins. Remove all burrs caused by the drilling. Now drill the same drill into a suitable small block of wood and leave the drill in the wood with its shank projecting. This projecting shank is used as a mandrel to accurately align the two laminations of each rod.

Place the laminations over the mandrel and using plenty of solder and flux, solder the two laminations together. You should now have a rod with the bosses on each lamination perfectly aligned. The rods have been deliberately etched too large so that the thin etched edges can be carefully filed so that the 'laminated' effect is lost and the rods appear to be made from one piece of metal.

BOGIE

There are several bogie options available and careful study of photographs is needed before you start. The options are:

- Different rivet patterns - emboss those wanted.
- Shallow frames (B1) or deep frames (B2).
- Bogie frame patches (B3).
- Splashers below the frame - remove for later period.
- Splasher beading - remove the riveted splasher fronts and solder the splasher beading in their place.
- Swing hanger suspension or De Glehn type - omit the swing hanger castings for the De Glehn type.

If you are fitting splasher beading remove the splashers as shown. First emboss all appropriate rivets including those in the hornguide ties. Solder the splasher beading (B3) in place to the rear of the frames. Fold over the hornguide ties through 180° and attach the strengthening patches (B4) if needed. Solder in the axle bearings. Form the splasher tops (B5) to shape. First mark a fold line 2.0mm from one end, then fold to the required angle using the frame side as a guide and solder in place removing any excess from the top edge. If you have left the lower splashers in place solder the splasher rear cover (B6) to the rear splasher.

Fold the stretcher (B7) into a 'U' section and solder it to one frame locating it in the half etched groove. Now solder the second frame in place remembering to have the wheelsets in place at the same time. Check that the bogie is square and level.

Insert the front angle strip (B8) through the slots in the front stretcher (B9) and attach the guard irons (B10) likewise. Solder the complete front stretcher in place. Repeat for the rear stretcher (B11).

Form the spring wire for the bogie side control as shown in the diagram, thread it through the two outer holes in the projecting tab in the front crossbeam and solder it in place. The side control wire will then act on either side of the bogie pivot and can be adjusted by bending the wire suitably.

Attach the upper swing hanger castings (WM1). Attach the lower swing hanger castings (WM2) through the larger holes in the spacer and make flush with the upper surface of the spacer. Fit the axlebox and spring castings (WM3). Form the safety brackets from 0.45 mm wire and solder in place through the small holes in the spacer.

If required, attach the ATC shoe (BR1) and ATC mounting bracket (B13) to the front stretcher as shown.

No.	Description	Sheet	No.	Description	Sheet
M1	Fluted coupling rod outer lamination (2)	1	B7	Bogie stretcher	4
M2	Fluted coupling rod inner lamination (2)	1	B8	Bogie front angle strip	4
M3	Plain coupling rod outer lamination (2)	1	B9	Bogie front stretcher	1
M4	Plain coupling rod inner lamination (2)	1	B10	Bogie guard iron (L & R)	1
B1	Shallow bogie frame (L & R)	5	B11	Bogie rear stretcher	1
B2	Deep bogie frame (L & R)	4	B12	Bogie pivot washer (6BA)	1
B3	Bogie splasher beading (2)	4	B13	ATC mounting bracket	4
B4	Frame strengthening patch (2L & 2R)	1	B14	Bogie front wheel splasher rear cover (2)	5
B5	Bogie Splasher tops (8)	5	B15	Bogie rear wheel splasher rear cover (2)	5
B6	Bogie splasher rear cover (2)	5			

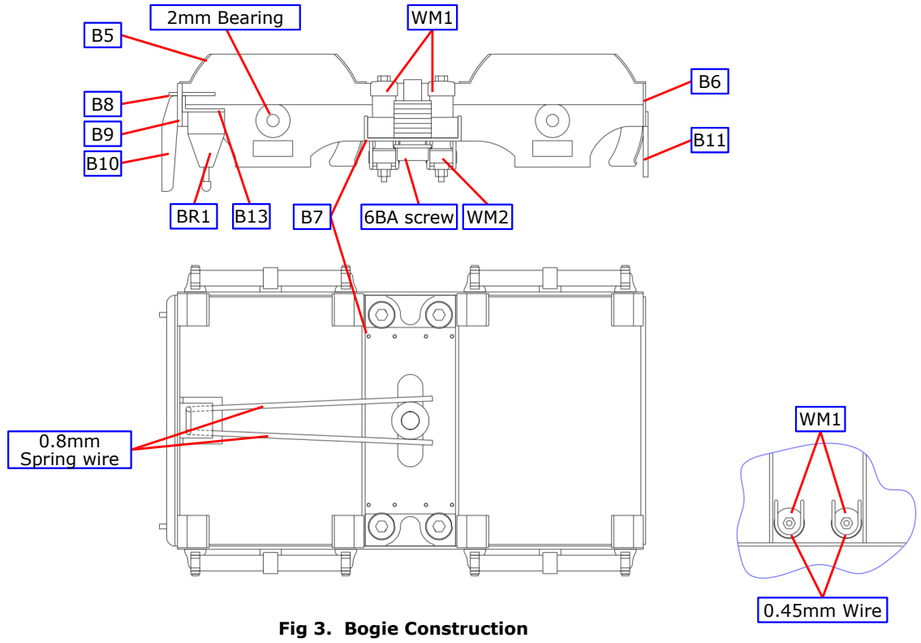

Fig 3. Bogie Construction

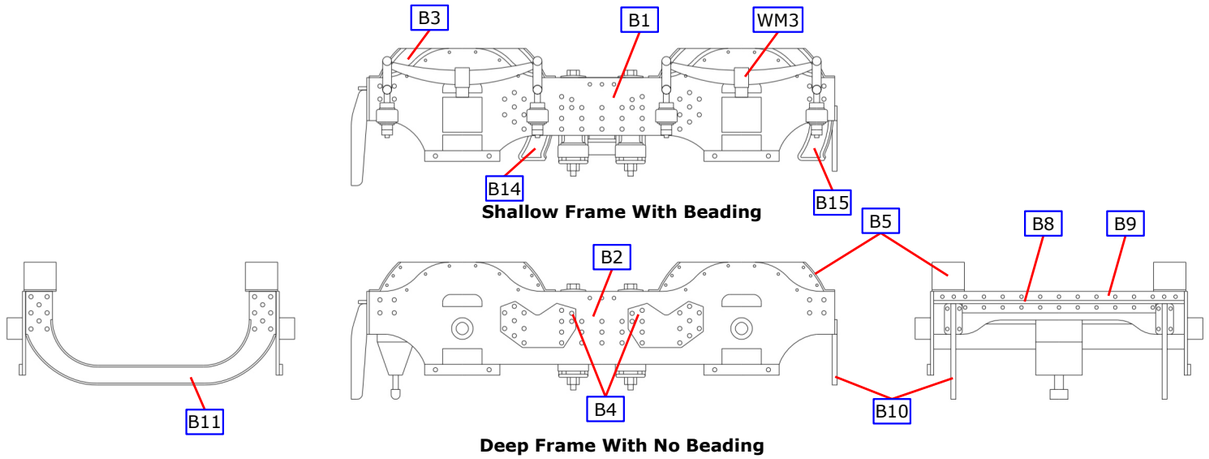

Fig 4. Bogie Appearance

FRAME CONSTRUCTION

FRAMES

Having decided which chassis to construct you can now start construction by preparing the inside frames (F1 & F2). Emboss the rivets marked by half etched holes. Form the frame joggle to narrow the frames from the rear of the bogie forward. Make the first bend inwards through 30° along the rear half etched line and strengthen the bend with a fillet of solder. Then make the second bend outwards in the same way.

Now open up the following holes in the frames:

P only if plunger pick-ups are being used
B for brake hanger pivots - 0.8mm
R for reversing lever cross shaft - 1.6mm
A for compensation beam pivot - 1/8"

FRAME SPACERS AND ASSEMBLING THE CHASSIS

Remove the stretchers (F3, F4, F5 & F6) to suit your chosen gauge. If you are fitting inside motion open up the slots in the cylinder block stretcher (F5) to the rear edge using the half etched lines as a guide and check the fit of the 3/32" brass cylinder tube in the inside motion kit. Tap the cylinder fixing hole 6BA. Solder the 6BA bogie pivot nut in place on F5 and then fold up parts F3 & F5 making sure that the half etched fold line is on the inside and that each bend is a right angle. Check that all tabs on the stretchers fit properly in their corresponding chassis slots so that the rest of the spacer is hard up against the inside of the frames. Bend the frames inwards slightly at the front along the half etched lines to match the shape of the front frame stretcher.

Now assemble the frames. Start by tack soldering the rear stretcher to both sides. Check that everything is square and that the stretchers are hard against the frames. Put an axle (or better a longer piece of 3/16" rod) through the rear bearings and place the chassis on a piece of graph paper to check that the axle is square to the frames. If all is well solder the remaining stretchers to the frames. It is important to check constantly that the chassis is square and that the frames are straight.

FITTING THE COMPENSATION BEAMS

Cut a piece of 1/8" brass rod so that it fits through the holes A and is flush with the outside face of the chassis frames. Prepare two pieces of 5/32" brass tube. Each should have a length of 3.5mm for the widest spacers or 2.5mm for the middle width of spacers. Open up the hole to accept the brass tube in each of the compensation beams (F11) and solder the beams to the pieces of tube 1 mm from one end. Place the compensation beams in place in the chassis and thread the brass rod through the frames and chassis. Now solder the pivot rod securely to the frames. Cut away the centre section of the pivot rod so that gearbox will fit in the chassis. Select the appropriate outside frame stretchers (F9 & F10) and fold along the half etched line, before soldering in place. The compensation beams can now be retained, by folding down the long tabs on the centre outside frame spacers.

Fit all the wheels and axles temporarily so that the beams are resting on the axle bearings and the bogie is mounted on its pivot supported by a suitable number of spacer washers (B17). Confirm that the compensation works properly and check that the chassis is sitting level.

Solder the gearbox anchor(F7) in place to form the support for the chosen motor/gearbox.

No.	Description	Sheet	No.	Description	Sheet
F1	Left inside frame	1	F6	Front frame stretcher, two widths	5
F2	Right inside frame	1	F7	ABC gearbox anchor	1
F3	Rear frame stretcher, two widths	1	F8	Compensation beams (2)	1
F4	Firebox front frame stretcher, two widths	1	F9	Centre outside frame stretcher, two widths (2)	6
F5	Cylinder block frame stretcher, two widths	1	F10	Front outside frame stretcher, two widths (2)	6

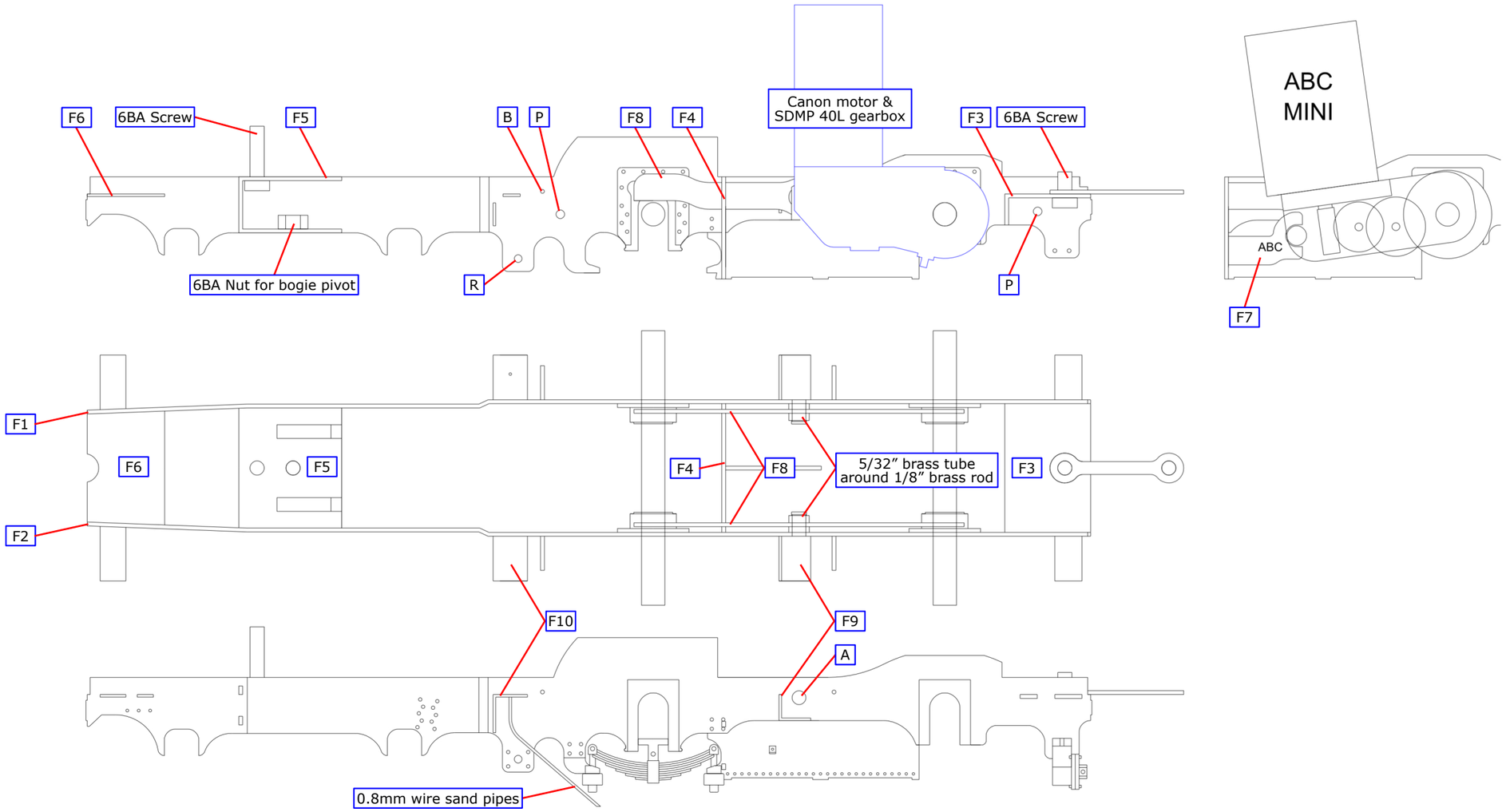

Fig 5. Frame Construction

OUTSIDE FRAMES

INSIDE MOTION.

If you are fitting inside motion construct it now following the separate instructions. There is a packing piece (F29) on the main etch to help fit the motion.

OUTSIDE FRAMES, BUFFER BEAM, DRAG BEAM, AND BRAKE HANGERS.

Fold the outside axle boxes (F18) through 180° with the fold line outside and carefully solder together. Open out the axle holes to be a sloppy fit on the axle. These axle boxes are simply cosmetic.

Select the appropriate outside frames early or later (F11 & F12 or F13 & F14). If you are fitting the strengthening plates (F17) remove the rivet and horn guide detail from that part of the frames which will be behind the strengthening plates. Check that the axle boxes are an easy fit in the horn guides in the outside frames, or the strengthening plates if these are to be used, and ease if necessary.

Attach the rivet strips (F15 & F16) to the top of outside frames. Solder the strengthening plates in position carefully checking that each one is in the correct position by trying the outside frame in place over the outside frame axleboxes on the axles. If your chosen prototype has strengthening plates without the strengthening tie bar then modify their shape as shown in Fig 2.

Solder short lengths of 0.8mm wire to the inside lower edge of the outside frames at each spring damper position to mount the spring dampers later. The positions are given by the distinctive rivet patterns. Fix the leading and trailing spring dampers, (BR2 & BR3) on place on the previously fitted wires. The smaller ones are used for the leading coupled axle.

Emboss the rivets on the drag beam (F19) and attach the rubbing plates (F20).

Solder the buffer beam (F21) and drag beam to the frames locating the frames in the appropriate half etched slots. Their upper edge must be .018" (0.45mm) above the upper edge of the frames so that they will be flush with the footplate when it is fitted. Any piece of .018" material placed on top of the frames will help ensure correct alignment.

Align the top of the outside frame with the buffer beam and drag beam and tack solder in place. Ensure the axles move freely and when satisfied solder the outside frame to the stretchers. Attach the angle brackets (F22) between frames and buffer beam and (F23) between frames and drag beam.

Fold up steps (F24, F25, F26 & F27) and attach to frames. The etched rivets on the frames locate in the holes in the steps to give accurate alignment.

Assemble the wheels, motor and side control washers (F32). Fit the outside frame hornblock ties (F31); this ties the wheels and axles into the chassis. Solder together the three laminations of the inside frame springs (F33 & F34) before fixing in place inside the spring hangers (See Fig 4). If required, fit the strengthening tie bars (F30).

No.	Description	Sheet	No.	Description	Sheet
F11	Early outside frame, left	1	F23	Frame to drag beam angle bracket (2)	6
F12	Early outside frame, right	1	F24	Front upper step (2)	5
F13	Later outside frame, left	1	F25	Front lower step (2)	5
F14	Later outside frame, right	1	F26	Rear upper step (2)	5
F15	Left outside frame rivet strip	6	F27	Rear lower step (2)	5
F16	Right outside frame rivet strip	6	F28	ATC Conduit clips (5)	5
F17	Outside frame strengthening plates (4)	1	F29	Inside motion packing piece	5
F18	Outside frame axlebox (4)	1	F30	Frame strengthening tie-bar (2)	5
F19	Drag beam	6	F31	Outside frame hornblock tie (4)	1
F20	Rubbing plates (2)	6	F32	Coupled wheel side control washer	1, 4
F21	Buffer beam	6	F33	Spring middle lamination (2)	1
F22	Frame to buffer beam angle bracket (2)	6	F34	Spring outer lamination (4)	1

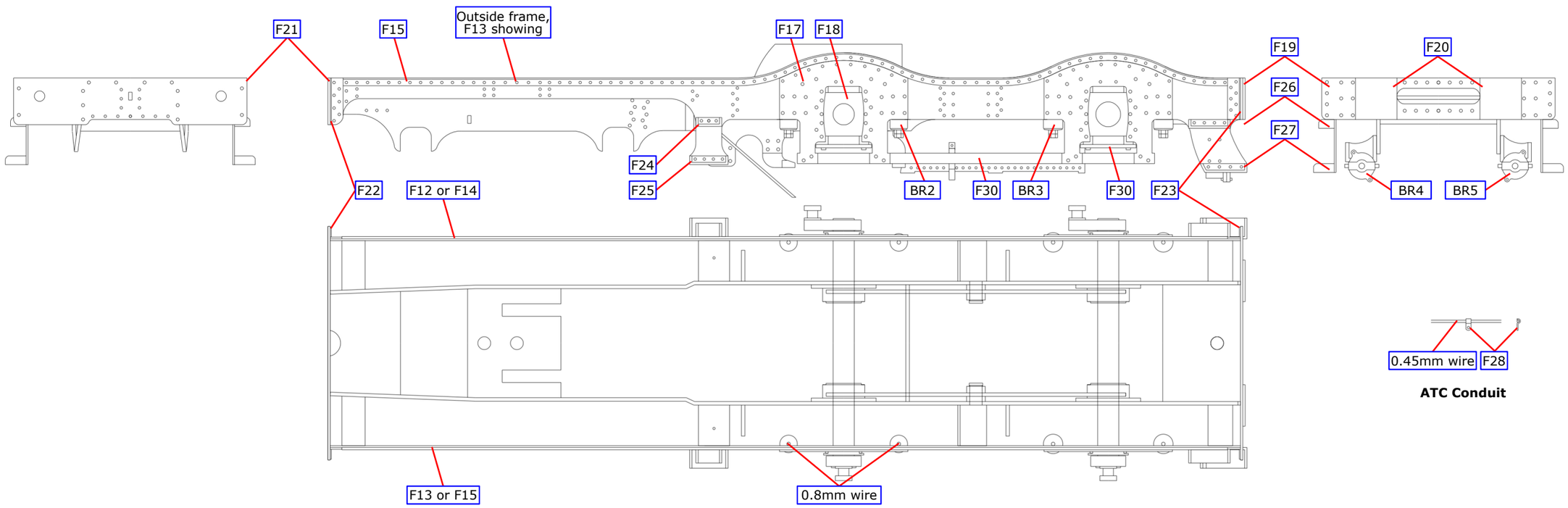

Fig 6. Outside Frame Construction

BRAKE & CHASSIS FINISHING

Brake Gear. Assemble the brake hangers (F35) from two laminations using a block of wood and an old drill to align the laminations. The front of each hanger is detailed with a brake shoe pin retainer (F36), as shown in the diagram, the small hole in the back of the retainer locating on the previously embossed rivet.

Fit the steam brake cylinders, left and right (BR4 & BR5) to the frame as shown. Emboss the rivets on each outside brake pull rod (F37). Fit the inner pull rods (F38), as shown in the diagram, attaching them either side of the steam brake cylinders. Fix the brake hangers in place using 0.8mm wire for the hanger pivots and for the cross shafts. Form and fit the brake pull rods safety brackets (F39) through the small slots in the ashpan sides and under the pairs of pull rods.

There is a choice of balance weights, the original (F40 & F41), a later style (F42 & F43) and the last style (F44 & F45). Secure the appropriate balance weights in position. Fix the cast spring dampers (BR2 & BR3) in place on the previously fitted wires. The smaller ones are used for the leading coupled axle.

Form sand pipes from 0.8mm wire and attach through the holes in the front outside frame stretchers.

Construct the buffers (WM4) as shown below; fit the buffers. Attach the tall early vacuum pipe (BR6) or the short later vacuum pipe (BR7) and the vacuum pipe dummy (BR7) to the buffer beam (See the appropriate GA).

No.	Description	Sheet
F35	Brake hanger/shoe lamination (8)	1
F36	Brake shoe pin retainer (4)	5
F37	Outer brake pull rod (2)	5
F38	Inner brake pull rod (2)	5
F39	Brake pull rod safety bracket (2)	4
F40	Original front balance weight (2)	1
F41	Original rear balance weight (2)	1

No.	Description	Sheet
F42	Later front balance weight (2)	6
F43	Later rear balance weight (2)	4
F44	Last front balance weight 92)	4
F45	Last rear balance weight (2)	4
F46	Drawbar (2)	1
F47	Washer for drawbar pivot (5)	?

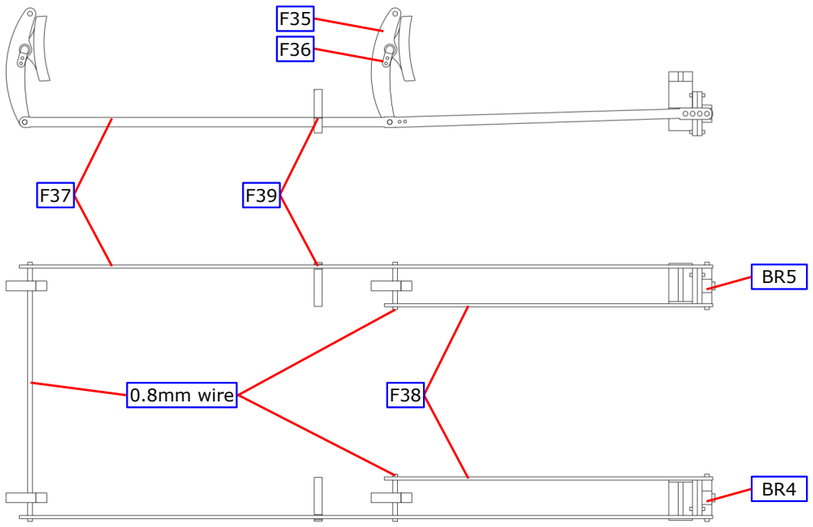

Fig 7. Brake Construction

Buffer Construction

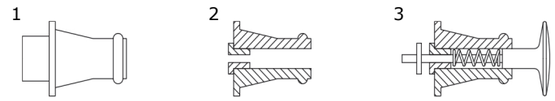

1. Drill casting (WM4) 2mm.
2. Remove rear of casting and glue bush in place.
3. Assemble with spring and retain with washer.

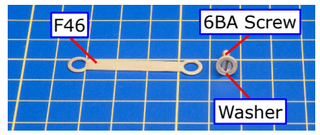

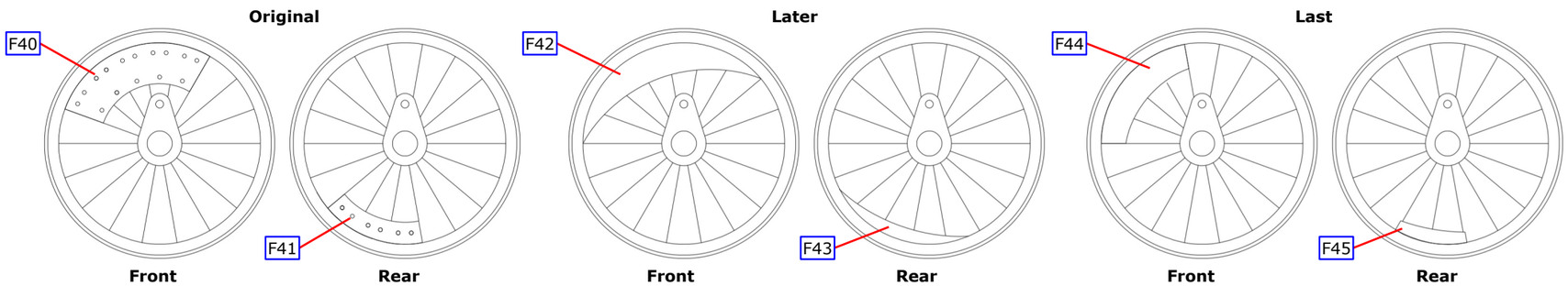

Fig 8. Balance Weights

NARROW FOOTPLATE & SMOKEBOXES

Emboss the rivets on the footplate (U1) inside frame extensions. Fold the footplate edges all round and solder the corners. The right side lamp bracket folds through 180° and is soldered to the outside face. Form the joggle in the inside frame extensions before folding up and soldering to the footplate. Fold up the remaining lamp brackets. Solder the footplate strengthening plates (U4) to the edge of the footplate. The half etched slots will accommodate the springs and spring hangers later so ensure the plates are accurately aligned.

Prepare the narrow footplate overlay (U2) by embossing the rivets under the lamp brackets. Form the curves in the footplate overlay. Start with the main convex curves, which are centred on the holes for the spring castings, followed by the smaller concave curves using the splasher faces as a guide. Note the curves in the overlay start before the splasher openings: this means that when the overlay is soldered to the footplate it will not be soldered to the footplate in the area immediately adjacent to the ends of the splashers.

Place the front overlay over the footplate so the lamp brackets pass through the holes provided and the body fixing holes align. Tack solder the overlay at the front edge then work evenly along the sides towards the rear. **Do not attach the area around the motor cut-out until last**.

No.	Description	Sheet	No.	Description	Sheet
U1	Footplate	5	U9	Unriveted front splasher top (2)	5
U2	Footplate overlay, narrow cab	5	U10	Riveted front splasher top (2)	5
U4	Footplate strengthening plate (2)	1	U11	Unriveted rear splasher top (2)	5
U6	Front frame extensions (2)	6	U12	Riveted rear splasher top (2)	5
U7	Splasher face with beading (2)	6	U13	Nameplate brackets (6)	5
U8	Splasher with rivets (2)	6	U14	Footplate small steps (8)	5, 6

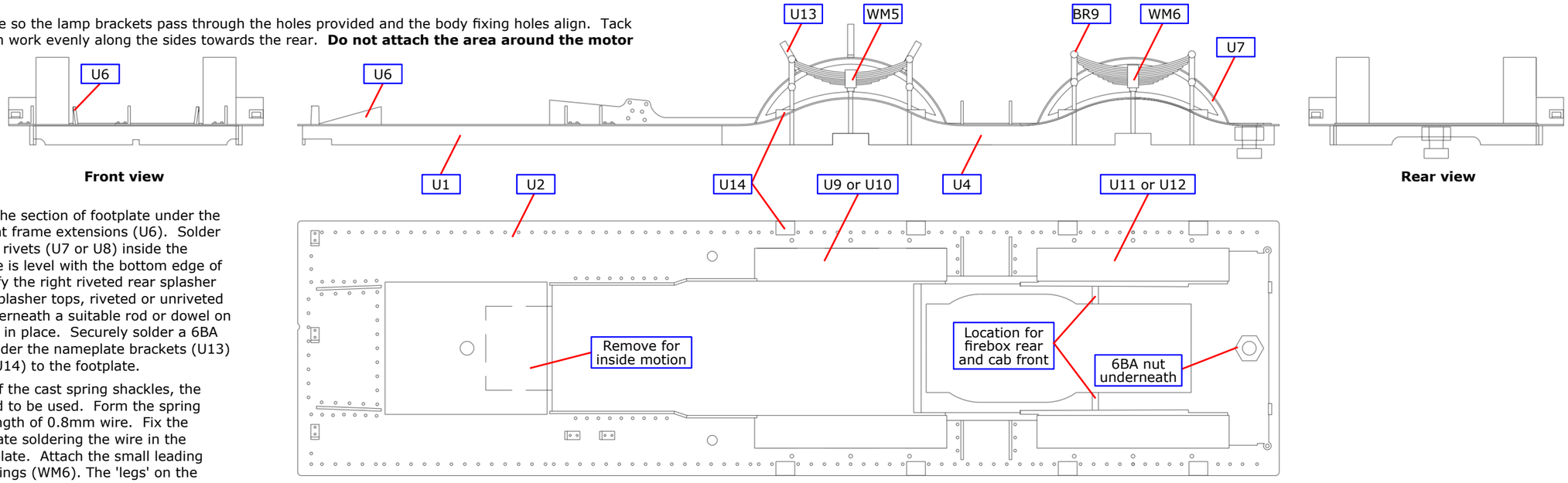

Fig 9. Narrow Footplate Construction

If you are fitting inside motion remove the section of footplate under the smokebox saddle as shown. Fit the front frame extensions (U6). Solder the splasher faces, with beading or with rivets (U7 or U8) inside the footplate edge so that their bottom edge is level with the bottom edge of the footplate side. If appropriate, modify the right riveted rear splasher top (U11) as shown below. Curve the splasher tops, riveted or unriveted (U9 & U11 or U10 & U12) by rolling underneath a suitable rod or dowel on a piece of rubber sheet and solder them in place. Securely solder a 6BA nut under the rear body fixing hole. Solder the nameplate brackets (U13) in place. Fit the footplate small steps (U14) to the footplate.

Springs. While we await the delivery of the cast spring shackles, the original method of construction will need to be used. Form the spring shackles (U23) and solder on a short length of 0.8mm wire. Fix the shackles through the holes in the footplate soldering the wire in the grooves in the footplate strengthening plate. Attach the small leading springs (WM5) and the large trailing springs (WM6). The 'legs' on the footplate edge should now be removed

Solder the spring hangers (BR9) into the slots in the footplate strengthening plate. Ensuring that they line up so that the springs slide in. Attach the small leading springs (WM5) and the large trailing springs (WM6).

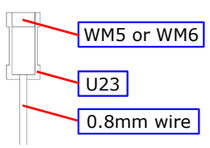

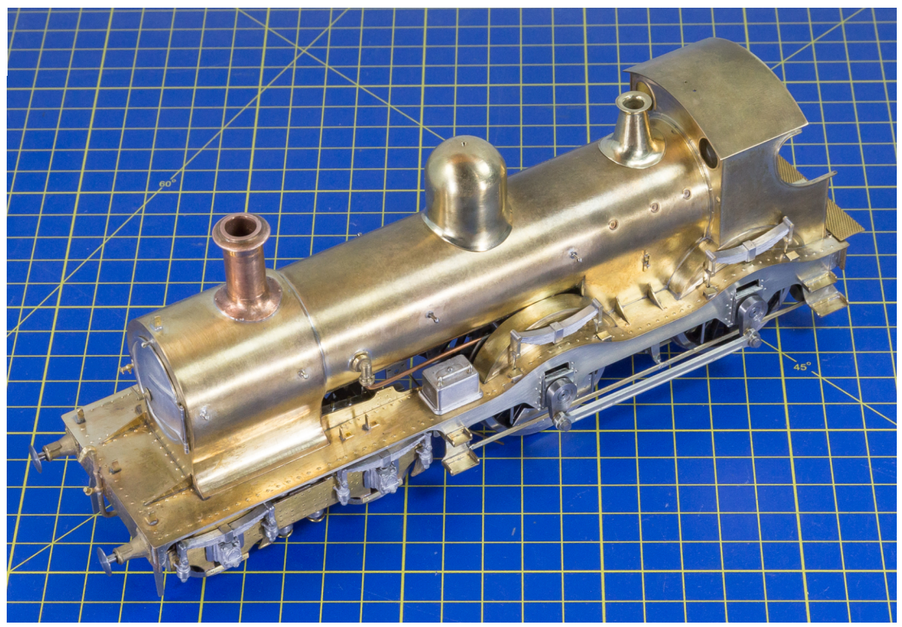

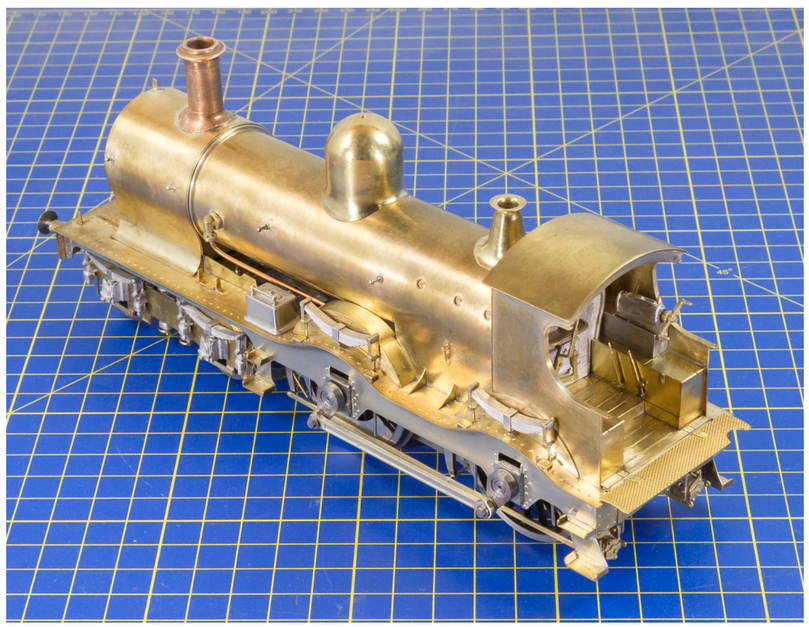

NARROW CAB

No.	Description	Sheet	No.	Description	Sheet
C1	Narrow cab front, S4 boiler	6	C13	Steel roof with parallel rain strips	6
C2	Narrow cab front, B4 boiler	6	C14	Steel roof with sloping rain strips	6
C3	Narrow cab front with raised roof	6	C15	Steel roof rear angle	6
C4	Narrow cab large window frame (2)	5	C16	Steel roof parallel rain strip	6
C5	Narrow cab small window frame (2)	6	C17	Steel roof sloping rain strip	6
C6	Narrow cab side (2)	4	C19	Splasher/toolbox	6
C7	Narrow cab side with raised roof (2)	4	C20	Toolbox hasp (2)	5
C8	Side cut out beading (2)	5	C21	Toolbox padlock	4
C9	Narrow cab roof support	6	C22	Drain cock lever	5
C10	Wood roof	6	C23	Sanding lever	5
C11	Wood roof side moulding	6	C24	Fall plate	4
C12	Wood roof front and rear moulding	6	C52	Narrow cab floor	6

ORIGINAL NARROW CAB

Emboss the rivets on the cab front, S4 or B4 boiler (C1 or C2). Attach the large or small window frames (C4 or C5) on the inside. Solder the cab front in position on the footplate.

Prepare the cab sides (C6) by embossing any rivet detail you wish and attaching the cut-out beading (C8) fitting the etched groove over the edge of the cab side. Cut off the beading flush with the upper rear edge of the side. Solder the cab sides in position. They are correctly aligned when the cab side handrails are vertical. Fit the vertical handrails from 0.8mm wire.

Solder the cab roof support (C9) between the rear edges of the cab sides. Curve the cab roof (C10) and solder the large and small whistles (BR10 & 11) to the roof. Solder the roof in place. Curve a piece of 0.8mm wire and solder to the wood roof in the etched groove to represent the fixing batten. The mouldings for the side, front and rear (C11 & C12) are fixed under the edges of the roof to the sides and rear.

The cab floor (C52) and splasher/toolbox (C19) may need reducing in width to allow for the gauge modelled; use the half etched lines as a guide. Fold up the step in the floor and check that it locates in the slots in the cab front. Fold up the splasher/toolboxes and solder on top of the floor. To the side of the toolbox add the toolbox hasp (C20) and padlock (C21); the padlock can be added after painting. Add the drain cock lever (C22) and sanding lever (C23) with some wire pivots to the toolbox side. Solder the splasher/toolboxes in place on the floor. Slightly curve the fall plate (C34) and hinge it in place as shown in below.

Glue the reverser base (WM8) in place. Attach the screw reverser handle (BR12) to the screw reverser (WM7) and then glue it in place on top of the base

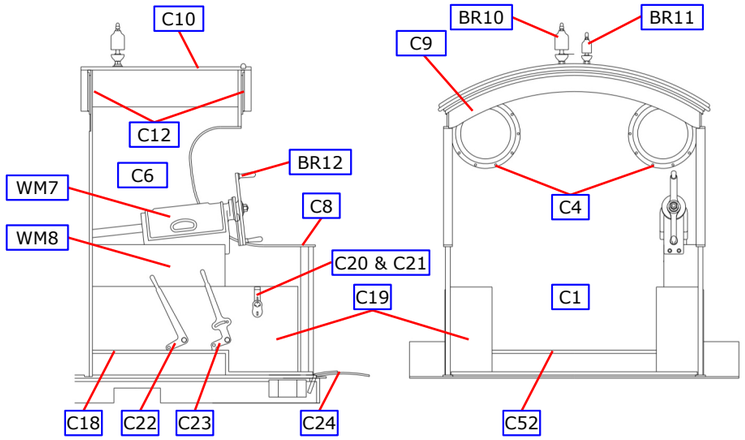

Fig 10. Narrow Cab, S4 Boiler, Wooden Roof

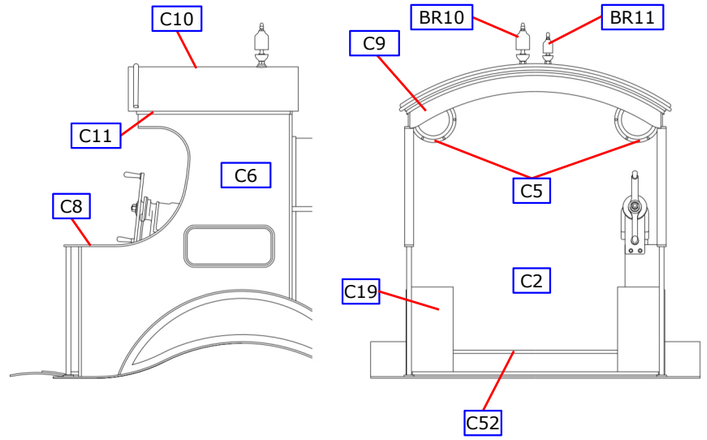

Fig 11. Narrow Cab, B4 Boiler, Wooden Roof

RAISED NARROW CAB

Emboss the rivets on the cab front with raised roof (C3). Attach the window frames (C4) on the inside. Solder the cab front in position on the footplate. Prepare the cab sides (C7) by embossing any rivet detail you wish and attaching the cut-out beading (C8) fitting the etched groove over the edge of the cab side. Cut off the beading flush with the upper rear edge of the side. If appropriate, form and fit the cab side handrails from 0.45mm wire and file off smooth on the inside. Solder the cab sides in position. They are correctly aligned when the cab side handrails are vertical. Fit the vertical handrails from 0.8mm wire.

Solder the cab roof support (C9) between the rear edges of the cab sides. Curve the cab roof, parallel or sloping rain strips (C13 or C14) and solder the large and small whistles (BR10 & 11) to the roof. Solder the roof in place. Solder the rear angle in place. Add the appropriate rain strip, parallel or sloping (C16 or C17) to the steel roof.

The cab floor (C52) and splasher/toolbox (C19) may need reducing in width to allow for the gauge modelled; use the half etched lines as a guide. Fold up the step in the floor and check that it locates in the slots in the cab front. Fold up the splasher/toolboxes and solder on top of the floor. To the side of the toolbox add the toolbox hasp (C20) and padlock (C21); the padlock can be added after painting. Add the drain cock lever (C22) and sanding lever (C23) with some wire pivots to the toolbox side. Solder the splasher/toolboxes in place on the floor. Slightly curve the fall plate (C34) and hinge it in place as shown in below.

Glue the reverser base (WM8) in place. Attach the screw reverser handle (BR12) to the screw reverser (WM7) and then glue it in place on top of the base

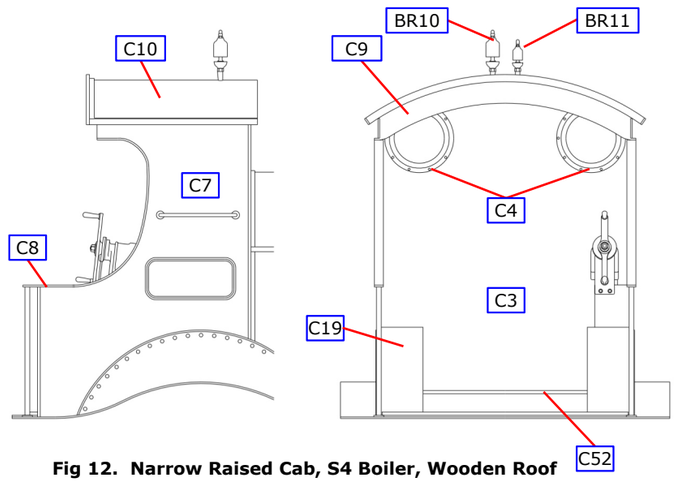

Fig 12. Narrow Raised Cab, S4 Boiler, Wooden Roof

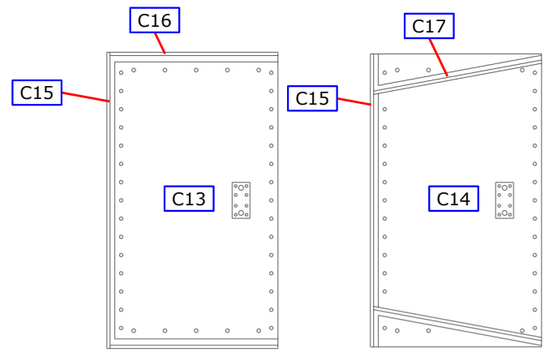

Parallel Rain Strips

Slopping Rain Strips

Fig 13. Steel Roof Types

Fig 12. Narrow Cab Construction

WIDE FOOTPLATE & CAB

Emboss the rivets on the footplate (U1) inside frame extensions. Fold the footplate edges all round and solder the corners. The right side lamp bracket folds through 180° and is soldered to the outside face. Form the joggle in the inside frame extensions before folding up and soldering to the footplate. Fold up the remaining lamp brackets. Solder the footplate strengthening plates (U4) to the edge of the footplate. The half etched slots will accommodate the springs and spring hangers later so ensure the plates are accurately aligned.

Prepare the footplate overlay (U3) by embossing the rivets under the lamp brackets. Attach the jig (U4) to the underside of the footplate, using a 6BA nut and bolt, and drill holes for the appropriate cab handrail stanchions.

Form the curves in the footplate overlay. Start with the main convex curves, which are centred on the holes for the spring castings, followed by the smaller concave curves using the splasher faces as a guide. Note the curves in the overlay start before the splasher openings: this means that when the overlay is soldered to the footplate it will not be soldered to the footplate in the area immediately adjacent to the ends of the splashers.

Place the font overlay over the footplate so the lamp brackets pass through the holes provided and the body fixing holes align. Tack solder the overlay at the front edge then work evenly along the sides towards the rear. Do not attach the area around the motor cut-out until last.

No.	Description	Sheet	No.	Description	Sheet
U1	Footplate	5	U10	Riveted front splasher top (2)	5
U3	Footplate overlay wide cab	5	U11	Unriveted rear splasher top (2)	5
U4	Footplate strengthening plate (2)	1	U12	Riveted rear splasher top (2)	5
U5	Jig for drilling hand rail stanchion holes in wide cab	6	U13	Nameplate brackets (6)	5
U6	Front frame extensions (2)	6	U14	Footplate small steps (8)	6
U7	Splasher face with beading (2)	6	U15	Spring shackle (8)	5
U8	Splasher with rivets (2)	6	U16	Cab floor support	6
U9	Unriveted front splasher top (2)	5			

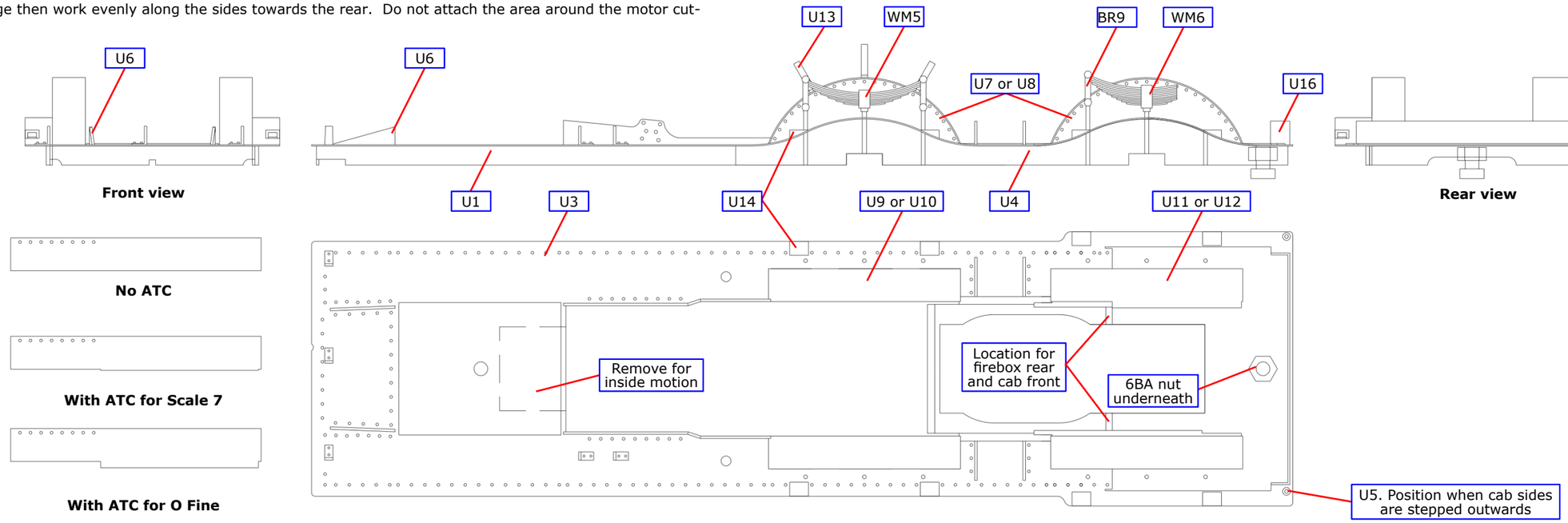

Fig 14. Wide Footplate Construction

Modification to the right riveted splasher top

If you are fitting inside motion remove the section of footplate under the smokebox saddle as shown below. Fit the front frame extensions (U6). Solder the splasher faces, with beading or with rivets (U7 or U8) inside the footplate edge so that their bottom edge is level with the bottom edge of the footplate side. If, appropriate, modify the right riveted rear splasher top (U11) as shown below. Curve the splasher tops, riveted or unriveted (U9 & U11 or U10 & U12) by rolling underneath a suitable rod or dowel on a piece of rubber sheet and solder them in place. Solder a 6BA nut under the rear body fixing hole. Solder the cab floor support (U16) in place. Solder the nameplate brackets (U13) in place. Fit the footplate small steps (U14) to the footplate.

Springs. While we await the delivery of the cast spring shackles, the original method of construction will need to be used. Form the spring shackles (U23) and solder on a short length of 0.8mm wire. Fix the shackles through the holes in the footplate soldering the wire in the grooves in the footplate strengthening plate. Attach the small leading springs (WM5) and the large trailing springs (WM6). The 'legs' on the footplate edge should now be removed.

Solder the spring hangers (BR9) into the slots in the footplate strengthening plate. Ensuring that they line up so that the springs slide in. Attach the small leading springs (WM5) and the large trailing springs (WM6).

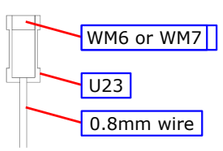

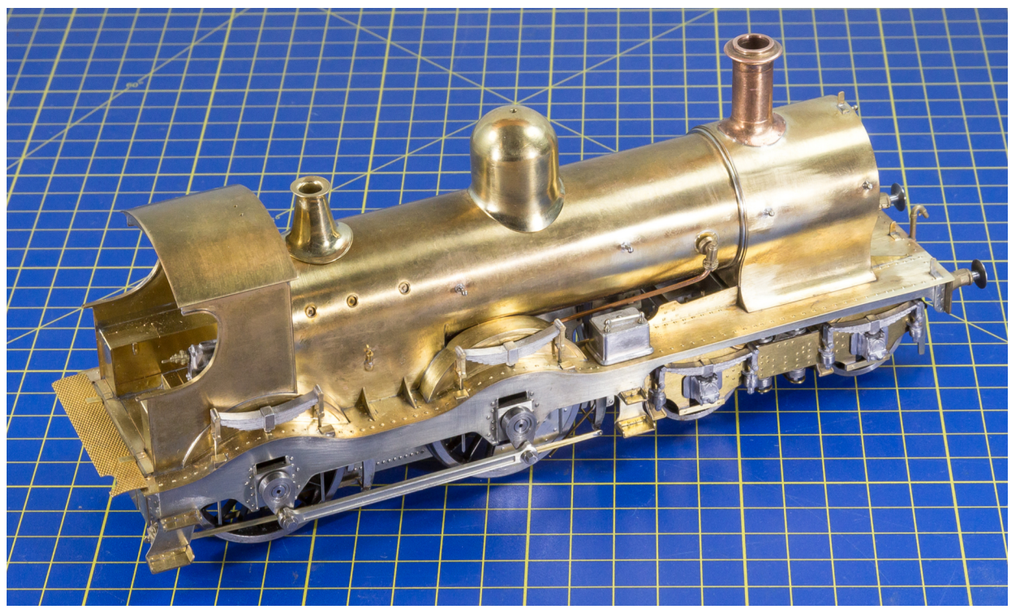

WIDE CAB WITHOUT ATC

Emboss the rivets on the chosen wide cab front, straight or L shaped windows (C25 or C26). Attach the window frames, straight or L shaped (C27 or C28) on the inside. Fit the porthole windows or blanking plates (C29 or C30). For whistles on the firebox the whistle plate (C31) should be attached as shown in Fig. 16 and holes drilled to accommodate the whistles. Solder the cab front in position.

Prepare the cab sides (C32) by embossing any rivet detail you wish and drilling for the cab side handrails; use C2 as a jig to drill the holes. As appropriate either use the straight cut out beading (C8) or flare the rear of the cab sides to match the groove in the side cut out beading (C33); attach the cut-out beading fitting the etched groove over the edge of the cab side. Leave the beading over length. Form and fit the cab side handrails from 0.45mm wire and file off smooth on the inside. Solder the cab sides in position. They are correctly aligned when the cab side handrails are vertical. Fit the vertical handrails from 0.8mm wire using C34 to represent the flange at the base.

Solder the cab roof rear support (C35) between the rear edges of the cab sides. If you are mounting whistles on the roof, use the narrow roof (C13) as a jig to drill holes the wide cab roof, either with parallel or sloping rain strips (C36 or C37). For roof mounted whistles solder the roof whistle plate (C38) in place on the cab roof. Curve the cab roof and solder in place. Solder the large and small whistles (BR10 & 11) to the roof. Solder the rear angle (C39) in place and then add the appropriate rain strips, parallel or sloping (C40 or C41) to the cab roof.

Cab Interior. The cab floor (C42) and splasher/toolbox (C19) may need reducing in width to allow for the gauge modelled; use the half etched lines as a guide. Fold up the step in the floor and check that it locates in the slots in the cab front. Fold up the splasher/toolboxes and solder on top of the floor. To the side of the toolbox add the toolbox hasp (C20) and padlock (C21); the padlock can be added after painting. Add the Drain cock lever (C22) and sanding lever (C23) with some wire pivots to the toolbox side. Solder the splasher/toolboxes in place on the floor.

Slightly curve the fall plate (C34) and hinge it in place as shown below.

Glue the reverser base (WM9) in place. Attach the screw reverser handle (BR12) to the screw reverser (WM7) and then glue it in place on top of the base.

No.	Description	Sheet	No.	Description	Sheet
C25	Wide cab front, straight window	6	C37	Wide cab roof , sloping rain strips	6
C26	Wide cab front, L shaped windows	6	C38	Roof whistle plate	5
C27	Straight windows frames	5	C39	Roof rear angle	6
C28	L shaped windows	5	C40	Parallel rain strips (2)	5
C29	Porthole windows	6	C41	Sloping rain strips (2)	6
C30	Porthole window blanking plates	6	C42	Wide cab floor	6
C31	Cab front whistle plate	5	C43	Wide cab tool box (2)	4
C32	Wide cab side	6	C19	Splasher/toolbox	6
C8	Side cut out beading (2)	5	C20	Toolbox hasp (2)	5
C33	Side cut out beading , flared sides	5	C21	Toolbox padlock	4
C34	Vertical handrail flange	5	C22	Drain cock lever	5
C35	Wide cab roof rear support	6	C23	Sanding lever	5
C36	Wide cab roof, parallel rain strips	6	C24	Fall plate	4

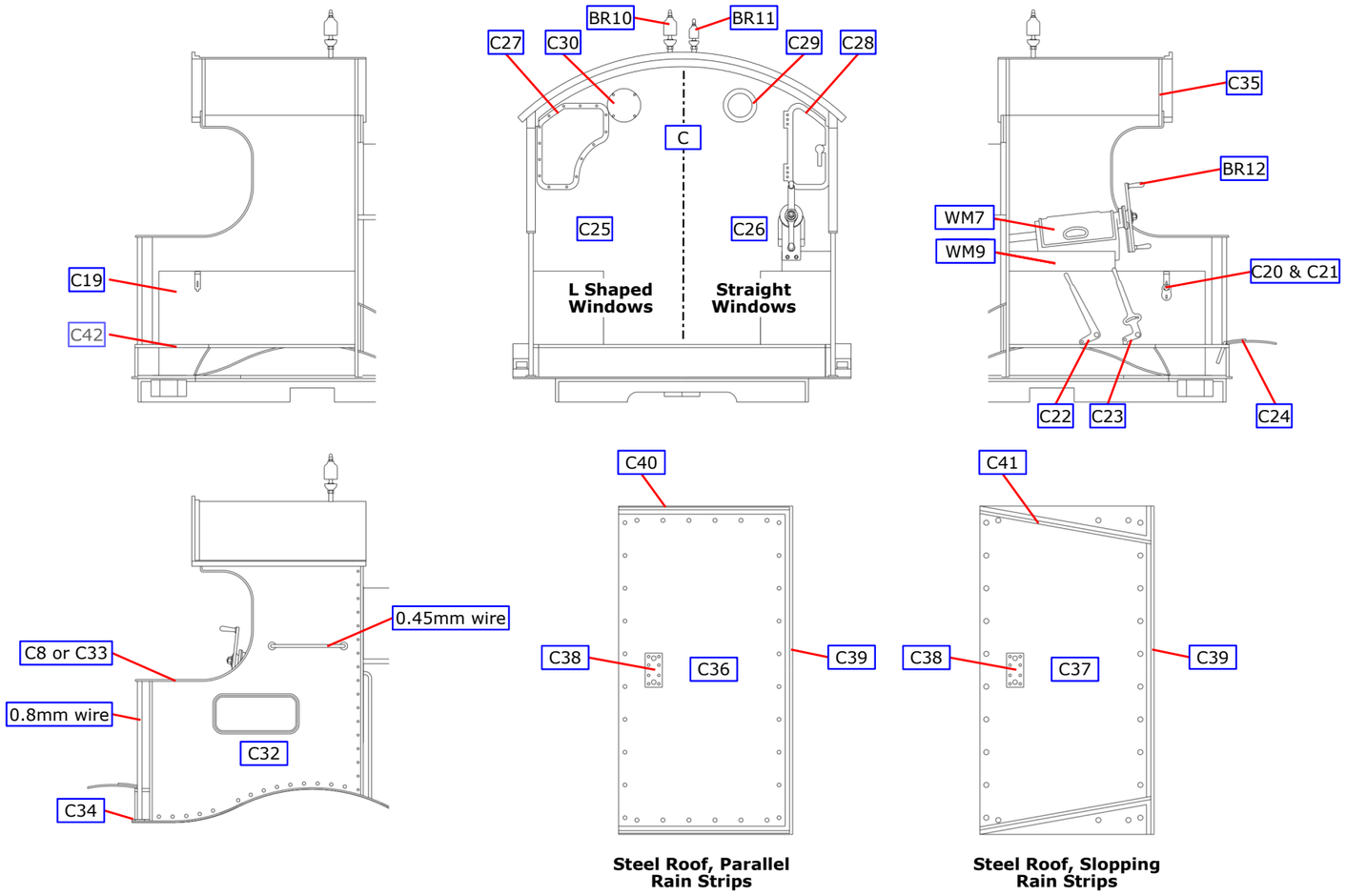

Fig 15. Wide Cab Without ATC

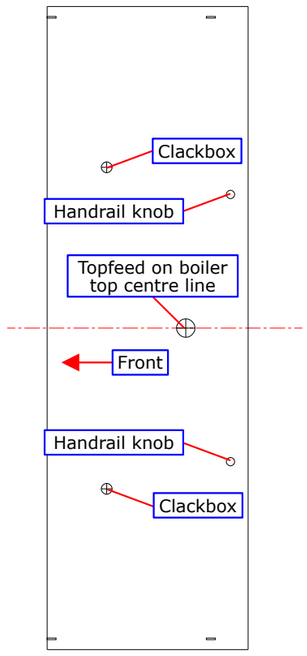

Fig 16. Clackbox & Top Feed Drilling Template

WIDE CAB WITH ATC

Emboss the rivets on the chosen wide cab front, straight or L shaped windows (C25 or C26). Attach the window frames, straight or L shaped (C27 or C28) on the inside. Fit the porthole windows or blanking plates (C29 or C30). For whistles on the firebox the whistle plate (C31) should be attached as shown in Fig 16 and holes drilled to accommodate the whistles. Solder the cab front in position.

Prepare the cab sides (C32) by embossing any rivet detail you wish and drilling for the cab side handrails; use C2 as a jig to drill the holes. As appropriate either use the straight cut out beading (C8) or flare the rear of the cab sides to match the groove in the side cut out beading (C33); attach the cut-out beading fitting the etched groove over the edge of the cab side. Leave the beading over length. Form and fit the cab side handrails from 0.45mm wire and file off smooth on the inside. Solder the cab sides in position. They are correctly aligned when the cab side handrails are vertical. Fit the vertical handrails from 0.8mm wire using C34 to represent the flange at the base.

Solder the cab roof rear support (C35) between the rear edges of the cab sides. If you are mounting whistles on the roof, use the narrow roof (C13) as a jig to drill holes in the wide cab roof, either with parallel or sloping rain strips (C36 or C37). For roof mounted whistles solder the roof whistle plate (C38) in place on the cab roof. Curve the cab roof and solder in place. Solder the rear angle (C39) in place and then add the appropriate rain strips to the cab roof.

Cab Interior. The cab floor (C44) and splasher/toolboxes, left and right (C45 & C46) may need reducing in width to allow for the gauge modelled; use the half etched lines as a guide. Fold up the step in the floor and check that it locates in the slots in the cab front. Fold up the splasher/toolboxes; the splasher/toolbox should be made to fit inside the edge of the floor so that the lower edge is flush with the underside of the floor. Solder in place.

Slightly curve the fall plate (C34 and hinge it in place as shown in Figs. 15 & 16.

Attach the screw reverser handle (BR12) to the screw reverser (WM7) and then glue it in place on top of the base.

No.	Description	Sheet	No.	Description	Sheet
C25	Wide cab front, straight window	6	C38	Roof whistle plate	5
C26	Wide cab front, L shaped windows	6	C39	Roof rear angle	6
C27	Straight windows frames	5	C40	Parallel rain strips (2)	5
C28	L shaped windows	5	C41	Sloping rain strips (2)	6
C29	Porthole windows	6	C44	Wide cab floor, ATC fitted	6
C30	Porthole window blanking plates	6	C45	Left splasher/toolbox, ATC fitted	6
C31	Whistle plate	5	C46	Right splasher/toolbox, ATC fitted	6
C32	Wide cab side	6	C47	Left hand seat bracket	5
C8	Side cut out beading (2)	5	C48	Left hand folding seat	6
C33	Side cut out beading , flared sides	5	C49	Right hand fixed seat	1
C34	Vertical handrail flange	5	C50	Drain cock lever	5
C35	Wide cab roof rear support	6	C51	Sanding lever	5
C36	Wide cab roof, parallel rain strips	6	C24	Fall plate	4
C37	Wide cab roof , sloping rain strips	6			

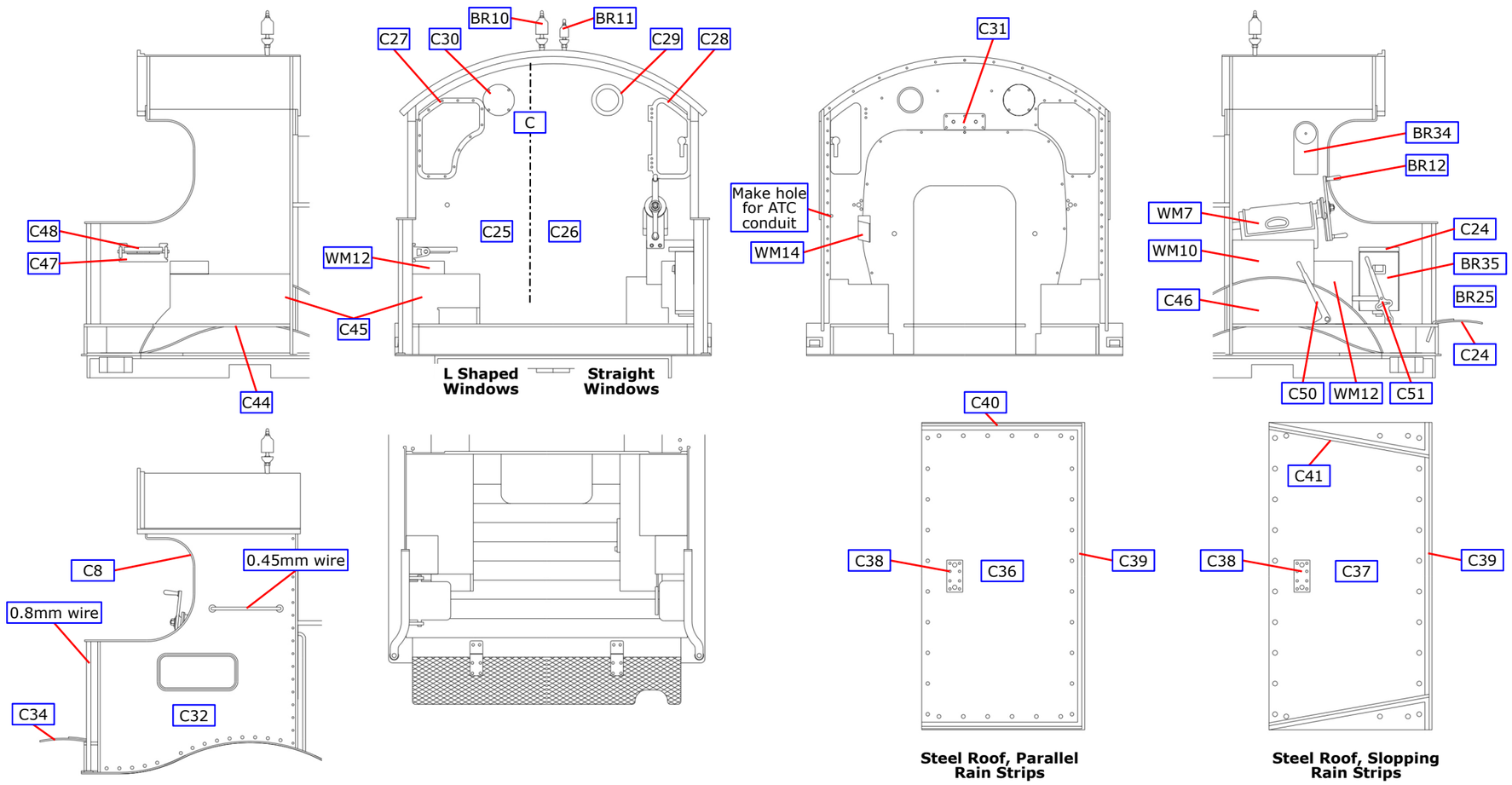

Fig 17. Wide Cab With ATC Construction

S4 BOILER WITH ROUNDTOP FIREBOX AND SQUARE FRONT SMOKEBOX

Before rolling the boiler the holes for individual washout plugs (SB8) can be drilled as can boiler clackbox and top feed holes, if needed. Use the template provided on page 13. The boiler rear former is missing the alignment mark at the top of the rear face. This can be marked by using dividers pivoted on the 0.8mm alignment dowel holes.

Emboss the rivets as needed on the S4 Boiler and firebox wrapper (SB13) on the dome boiler band and firebox band. Form the boiler by rolling around suitable sized rod or dowel. Solder the S4 Boiler washout plugs (SB14) in place inside the firebox. Ensure that the fit is correct over the boiler front and rear formers (SB9 & SB10). Solder a 6BA nut over the hole in the centre of the front former to allow the smokebox to be screw fixed to the boiler.

Bend the boiler band joining brackets on the boiler joining strip (SB11) and fit through the small slots from inside the boiler. If the fit is good and the formers fit, then solder the wrapper ends together with the boiler joining strip. The formers are now soldered in place flush with the back and front of the boiler section with the notch on the top of the rear former in line with the mid line of the wrapper. Solder two short pieces of 0.8mm wire into the two holes in the rear former to act as dowels to align the boiler and firebox. Solder the S4 Boiler firebox front and rear formers (SB15 & SB16) in place. Solder two short pieces of 0.8mm wire into the two holes in the rear former to act as dowels to locate the firebox onto the cab front.

No.	Description	Sheet	No.	Description	Sheet
SB8	Individual boiler washout plugs (4)	6	SB20	Boiler clackbox flange (2)	6
SB9	Boiler front former	1	SB21	Smokebox base	4
SB10	Boiler rear former	1	SB22	Smokebox front former	6
SB11	Boiler joining strip	6	SB23	Smokebox rear former	4
SB13	S4 Boiler and firebox wrapper	5	SB24	Smokebox front plate	6
SB14	S4 Boiler washout plugs (2)	5	SB25	Smokebox rear plate	4
SB15	S4 Boiler firebox front former	1	SB26	Flush riveted wrapper	4
SB16	S4 Boiler firebox rear former	1	SB27	Snap head riveted wrapper	4
SB17	Whistle shield	6	SB28	Smokebox front step	4
SB18	Firebox brackets (4)	5	SB29	Smokebox side steps (2)	4 & 5
SB19	Firebox cover plate (2)	1	SB30	Smokebox and boiler ring	1

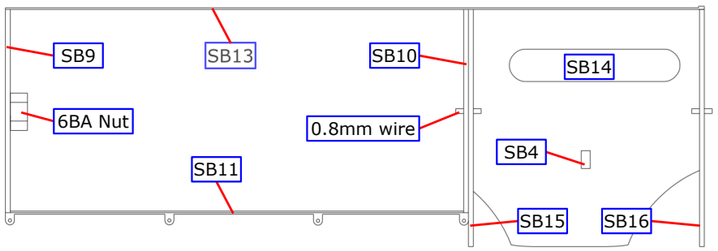

Fig 18. S4 Boiler & Firebox Construction

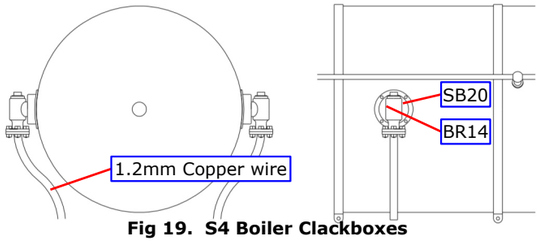

Fig 19. S4 Boiler Clackboxes

Drill a 1.2mm hole in the boiler clackboxes (BR13) to take the copper wire. Fit the clackboxes in the previously drilled holes with the boiler clackbox flanges (SB20) as shown. Curve the copper wire to match the drawing.

The early smokeboxes had a plain front with a square front edge and ringed door. Later snap head rivets were used and from c1920 the smokeboxes had a pressed front with a rounded front edge and Churchward type door without the ring

SMOKEBOX WITH A SQUARE FRONT EDGE.

Fold the smokebox base (SB21) into an inverted tray and solder a 6BA nut over the hole for the body fixing screw. If required emboss the rivets in the smokebox front plate (SB24). Solder the smokebox front former and plate (SB22 & SB24) together before fixing them to the base. Solder the smokebox rear former (SB23) to the rear. Roll to shape the smokebox wrapper, either flush riveted or snap head riveted (SB26 or SB27) and solder in place with its edges flush with the front and back formers. Round the edge of the smokebox rear plate (SB25)and solder to the rear. Similarly round the edge of the smokebox and boiler ring (SB30). Open out the hole in the rear former, rear plate and the rear plate to clear 6BA.

If required, bend up the smokebox steps, front and side (SB28 & SB29) and solder in place.

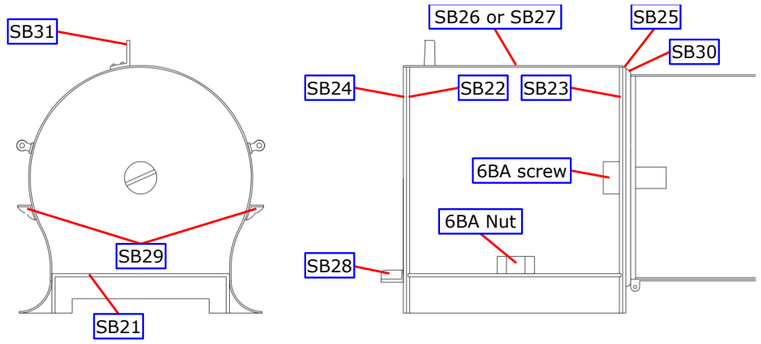

Fig 20. Smokebox With a Square Front Edge

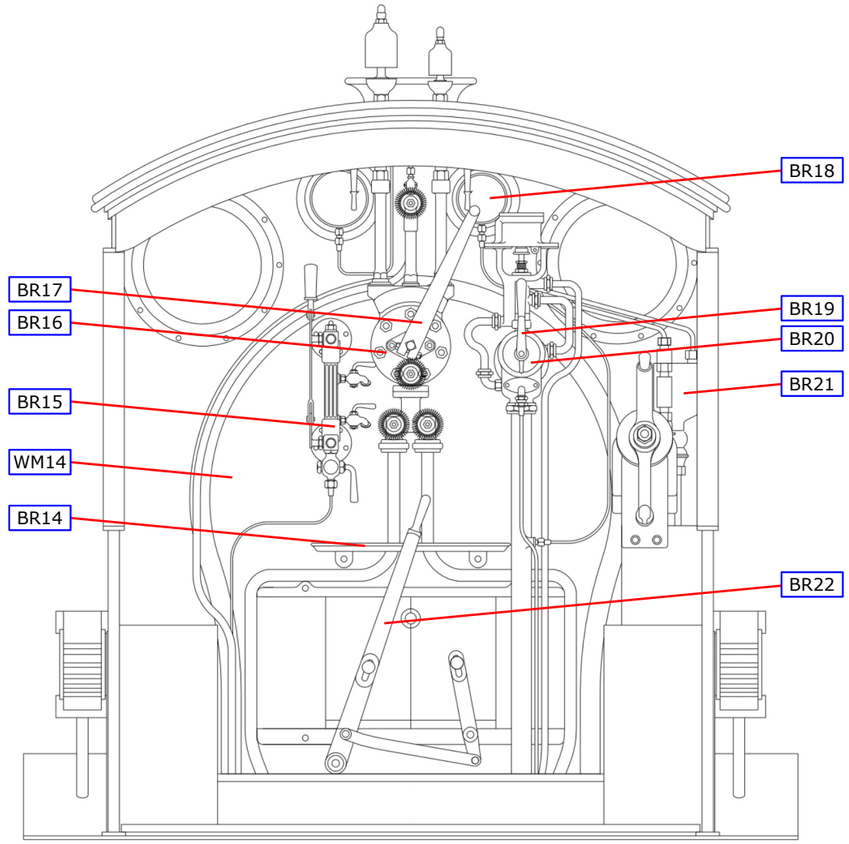

Fig 21. S4 Boiler Cab & Backhead

Use the drawing of the cab interior to assemble the backhead and the cab interior detail. Use copper wire of a suitable size for the pipes. Solder the backhead to the cab floor to make a removable unit.

The back plate mounted clack boxes (BR23) will not be required if you have fitted the boiler clack boxes or top feed.

FORMING THE FIREBOX

Reduce the width of the lower faces of the firebox rear former (SB1) so that it will fit between the frames in the locating groove in the footplate. Solder together the two laminations of the firebox front (SB2). The lamination with small etched groove in the middle of the top edge must be the front lamination. Clean off the cusp of both the front (SB1) and rear former (SB2). Using the small dimples provided mark the centre lines on the outside and the inside of each part.

To assemble the firebox two 100mm pieces of 4BA studding will be required with four brass nuts and four stainless steel nuts. Thread the brass nuts on to the studs.

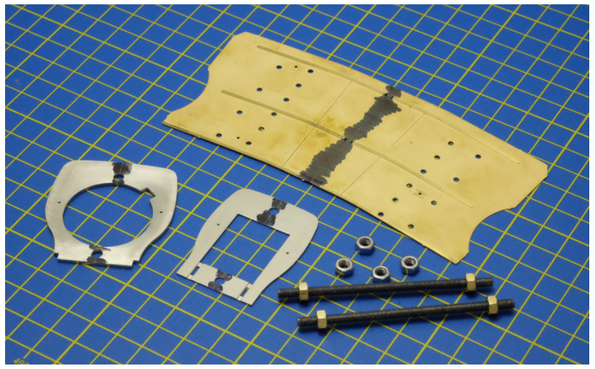

Set the two formers on to the studs, retain them with the stainless steel nuts. Ensure the length of the assembly over the formers is 38.4mm. Always measure the distance from the bottom of the firebox; even using a steel rule and eyeglass you can get pretty close to this sort of dimension with care. Take your time, measure and check it a few times. It's easier to use a vernier or similar gauge to get a precise measurement and to check that the formers are parallel.

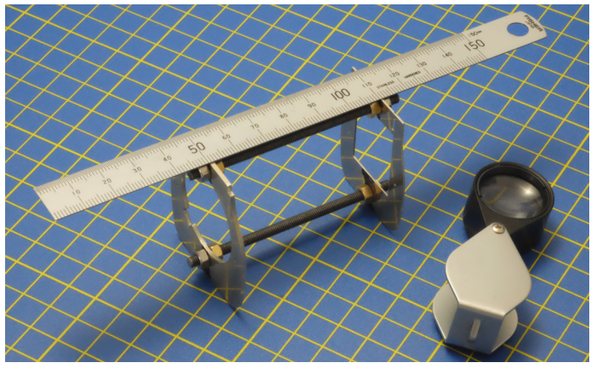

Check that the formers are square, both front and rear; do this on a decent flat surface. When correctly spaced apart the front will fit in the half etched recess in the footplate and the rear, pinned to the cab front, will fit with the tabs on the lower edge of the cab front in the footplate slots.

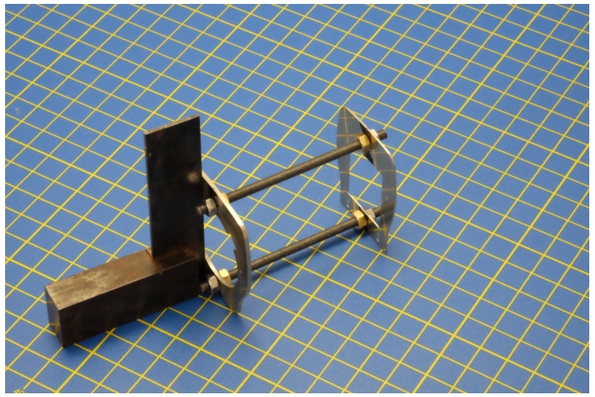

Tighten the stainless steel nuts up tightly and then solder the brass nuts to the formers. A good blobby tack, as here, will do fine:

Note: From this stage the formers form a pretty strong assembly. Any attempt to twist the assembly results in one stud tightening as the other slackens. Just make sure the nuts are tightened up and you've checked the assembly is square again before moving on to the next stage.

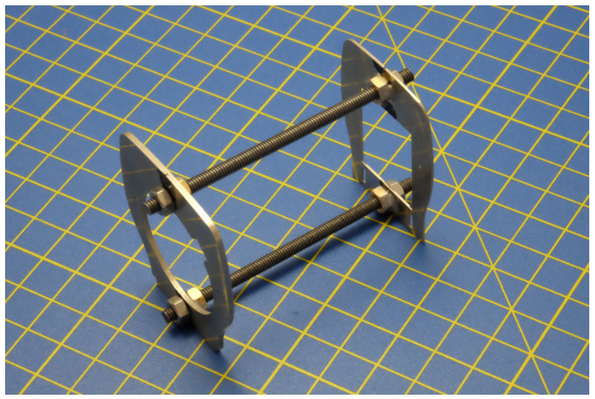

No.	Description	Sheet	No.	Description	Sheet
SB1	B4 firebox rear former	1	SB4	Firebox band joining brackets	6
SB2	B4 firebox front formers (2)	1	SB5	Firebox washout plugs, left	6
SB3	B4 firebox wrapper	4	SB6	Firebox washout plugs, right	6

Emboss the four rivets for the ends of the cladding fixing bands on the firebox wrapper (SB3).

Align the centre line marks, the top can be formed to a gentle radius. This is a simple rolling job, using a length of dowel and finger pressure. An old round file has a taper is useful on GWR fireboxes which don't have a constant radius. Ensure that the centre lines are maintained while forming the second shoulder.

On waisted fireboxes, start forming the concave sections; this might be easier to do off the formers. The final job is to pull in the waisted section, by putting a gentle curve on the sides of the firebox; again this is dowelling and finger pressure.

As can be seen, it's not a perfect match to the formers, but gentle finger pressure is enough to get the wrapper to meet the formers without distortion.

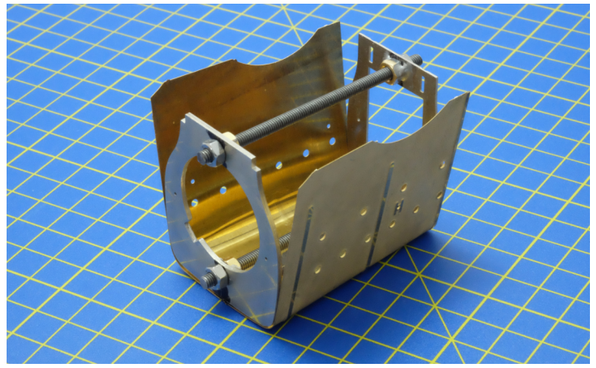

Tack the outside of the firebox at the centre and corners, both front and rear. Again, take care and check that the centres retain the alignment that we've worked so hard to achieve. Now work down the formers alternating tacks left/right and front/rear to even out any expansion of the wrapper. Finally run the seams round at both ends.

With the wrapper now firmly attached to the formers, the stainless steel nuts can be undone and the studs spun out.

Run an extra fillet of solder into the internal front shoulders of the firebox to support the area which will be filed back. The brass nuts can be heated and removed. Remove the rear scrap section of the formers.

The base, front and rear are now rubbed down on a sanding board to keep them flat, this will remove the cusps from the wrapper and leave the firebox ready for the final shaping and fitting to the rest of the loco.

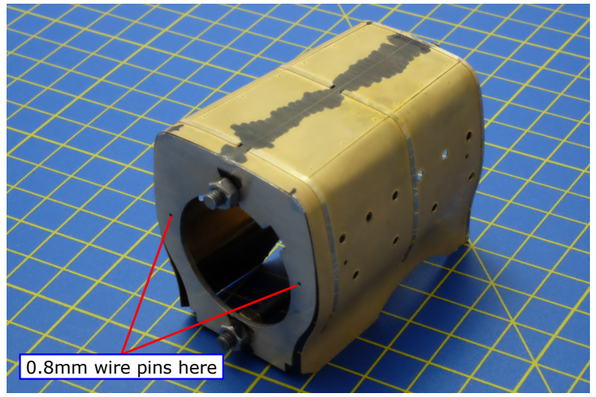

Fold the firebox band joining brackets (SB4) into a 'U' shape so that they fit through the slots in the firebox top and solder in place from inside. Complete with a short piece of 0.45mm wire to represent the tightening bolt. Solder the washout plugs (SB5 & SB6) in place inside the firebox and attach the mudhole doors (WM24) in place on the firebox corners.

Solder two 0.8mm wire pins into the rear former, from the inside, to align the cab front onto. Push the cab onto the pins and check for fit on the footplate.

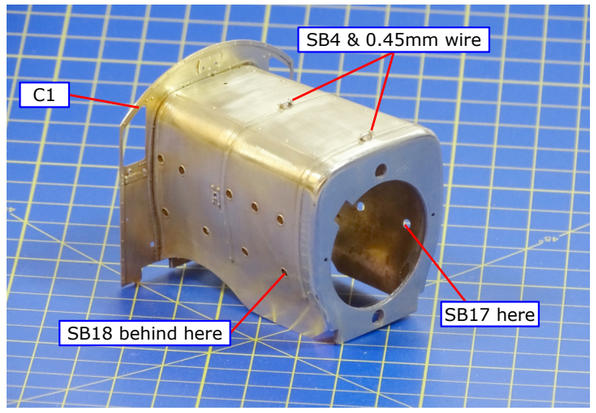

B4 BOILER & SMOKEBOX WITH A ROUNDED FRONT EDGE

Boiler. Before the boiler (SB7) is rolled the boiler washout plugs can be drilled out and replacement individual wash out plugs (SB8) can be soldered in place if you prefer. Use the template below to mark and drill the appropriate holes for the boiler clack boxes and top feed where needed. Roll the boiler around suitable rods. Check the rolled boiler wrapper for fit around the formers, front and rear (SB9 & SB10). An etched groove was not included at the top of the rear boiler former; this mark should be scratched into the former. The position can be determined by using a pair of dividers pivoted in the dowel holes. Solder a 6BA nut over the hole in the centre of the front former to allow the smokebox to be screw fixed to the boiler.

Bend out the boiler band joining brackets on the boiler joining strip (SB11) and fit through the small slots from inside the boiler. If the fit is good, the formers fit with the marks aligned with the groove in the wrapper and the cut outs clear of the jointing strip, then solder the wrapper ends together with the jointing strip. Solder the formers in place so that they are almost flush with the ends. Solder two short pieces of 0.8mm wire into the holes in the rear former to act as dowels to locate the boiler and firebox. Check the boiler to firebox fit. Represent the bolts in the boiler band joining brackets using 0.45mm wire.

No.	Description	Sheet	No.	Description	Sheet
SB7	B4 boiler wrapper	5	SB23	Smokebox rear former	4
SB8	Individual boiler washout plugs (4)	6	SB24	Smokebox front plate	6
SB9	Boiler front former	1	SB25	Smokebox rear plate	4
SB10	Boiler rear former	1	SB26	Flush riveted wrapper	4
SB11	Boiler joining strip	6	SB27	Snap head riveted wrapper	4
SB12	Top feed pipe overlay	5	SB28	Smokebox front step	4
SB21	Smokebox base	4	SB29	Smokebox side steps (2)	4 & 5
SB22	Smokebox front former	6	SB30	Smokebox and boiler ring	1

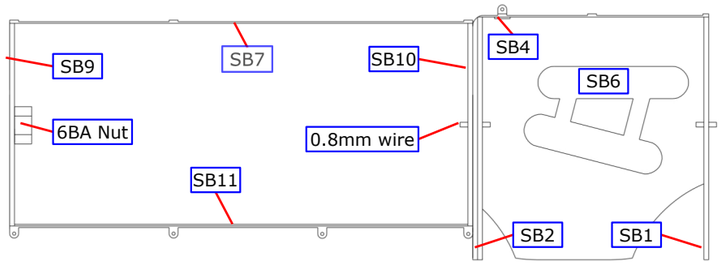

Fig 22. B4 Boiler & Firebox Construction

If appropriate, roll the top feed pipe overlay (SB12) to the correct curvature and solder in place on the boiler using the central hole to aid location. Do not solder the section which will be under the top feed casting (WM17) to the boiler. When the overlay is soldered in place remove this section by cutting through with a sharp blade. Attach the top feed casting and form the top feed pipes from 1.4mm wire so that they disappear behind the sand boxes.

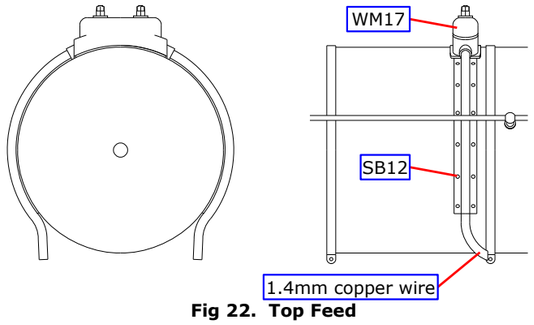

Fig 22. Top Feed

SMOKEBOX WITH A ROUNDED FRONT EDGE

Solder the smokebox front and rear formers (SB22 & SB23) to the base. Roll to shape the smokebox wrapper, either flush riveted or snap head riveted (SB26 or SB27) and solder in place with its rear edge flush with the back former; the front edge will overhang by the thickness of the front plate (SB24). Carefully file the wrapper back to the profile shown in Fig 11. Now round most of the edge (not the lower edge on each side) of the front plate before soldering it in place on the smokebox front. Round the edge of the smokebox rear plate (SB25)and solder to the rear. Similarly round the edge of the smokebox and boiler ring (SB30). Open out the hole in the rear former, rear plate and the rear plate to clear 6BA.

If required, bend up the smokebox front step (SB28) and solder in place and fit the smokebox side steps (SB29).

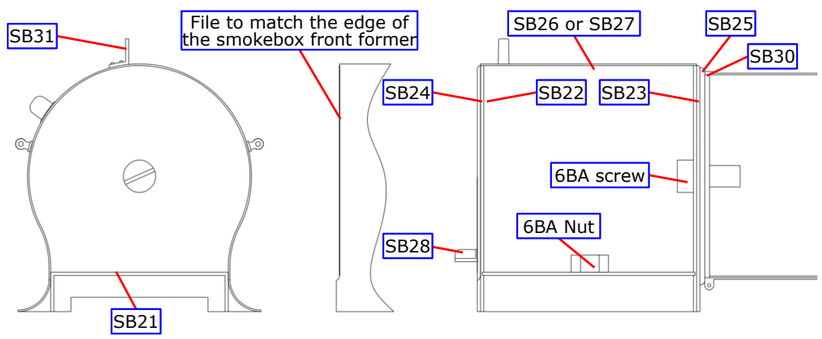

Fig 23. Smokebox With a Rounded Front Edge

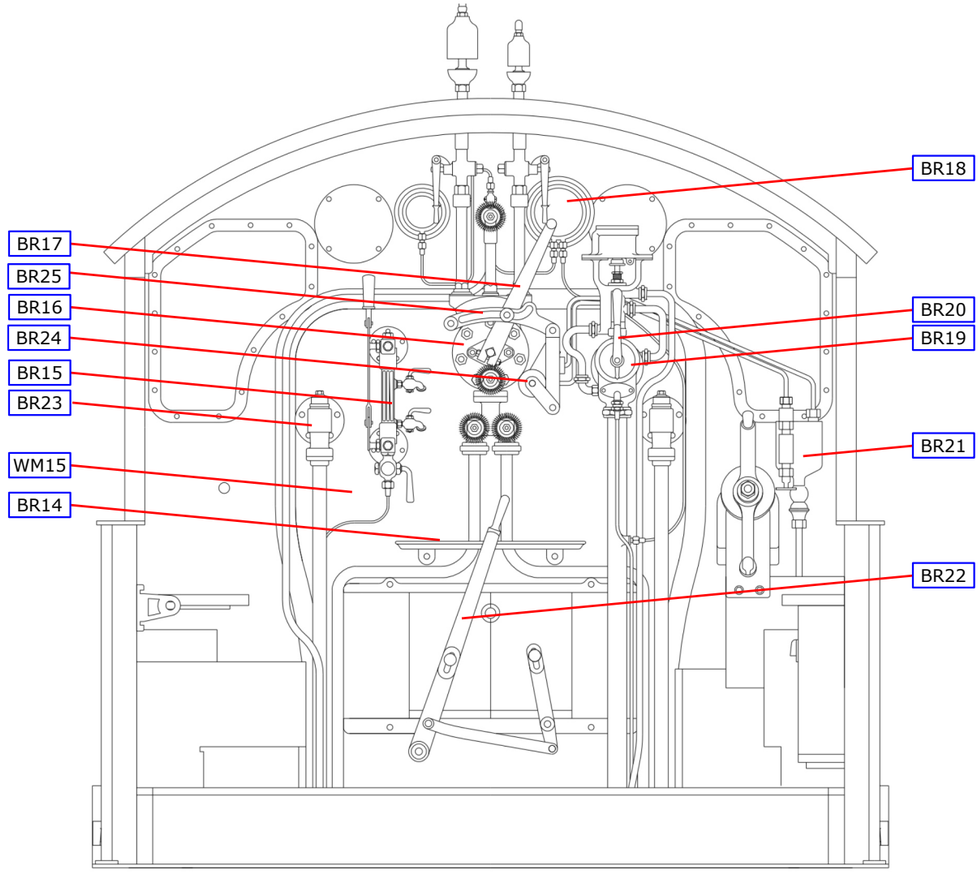

Fig 24. B4 Boiler Cab & Backhead

Use the drawing of the cab interior to assemble the backhead and the cab interior detail. Use copper wire of a suitable size for the pipes. Solder the backhead to the cab floor to make a removable unit.

The back plate mounted clack boxes (BR26) will not be required if you have fitted the boiler clack boxes or top feed.

FINISHING DETAILS

With a 6BA screw, bolt the smokebox to the boiler. Fix the boiler to the firebox by soldering the wire dowels to the firebox from inside.

Locate the smokebox/boiler/firebox on the footplate and check the fit and alignment. You will have to remove some material from the inside edge of the leading splasher to enable the boiler to sit horizontally. When satisfied with the alignment tack solder the smokebox and the firebox to the footplate before completing the soldering.

The firebox side bracket (SB18) and, if appropriate, the cover plates (SB19), visible in later years, are soldered in place on the firebox sides between the splashers as shown in Fig 26. If appropriate, fit mud hole doors to the firebox,

Fix medium handrail knobs in the four holes in the boiler and four small knobs in the holes in the smokebox. Form the handrail to shape, thread on the front medium knob, and fix the handrail in place, checking its location in the holes in the cab front. Solder the lamp bracket (SB31) in place.

Fit the original smokebox door (WM21). Fit the smokebox door handles (BR31). Fit the steam lance cock (BR32).

Fit the inside of the dome (WM18) and the safety valve base (WM19) ensuring that both are vertical. Polish and fit the dome (BR26) and the dome lubricator (BR27). Fit the safety valves (BR28) to the top of the safety valve base. Polish and fit the safety valve casing (BR29).

Fit the a set of handrails to the top of the sandboxes (WM20) and then fit the sandboxes in place on the footplate.

If required, fit the mud hole covers (WM

No.	Description	Sheet	No.	Description	Sheet
SB17	Whistle shield	6	SB19	Firebox cover plate (2)	11
SB18	Firebox brackets (4)	5	SB31	Lamp bracket	5

WM17 1 Tapered chimney

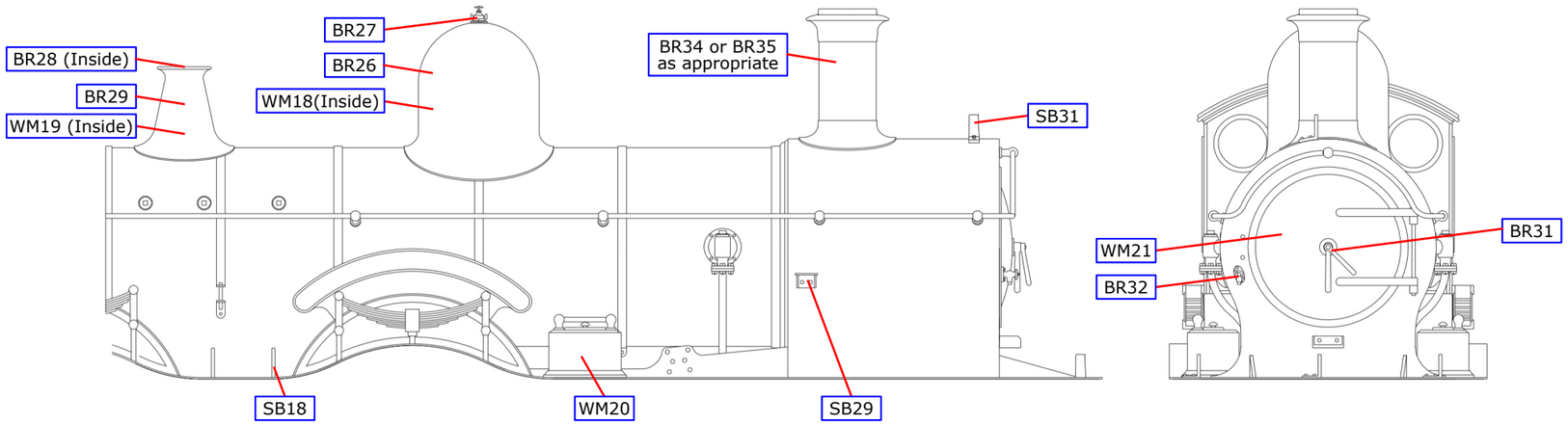

Fig 25. B4 Boiler Finishing Details

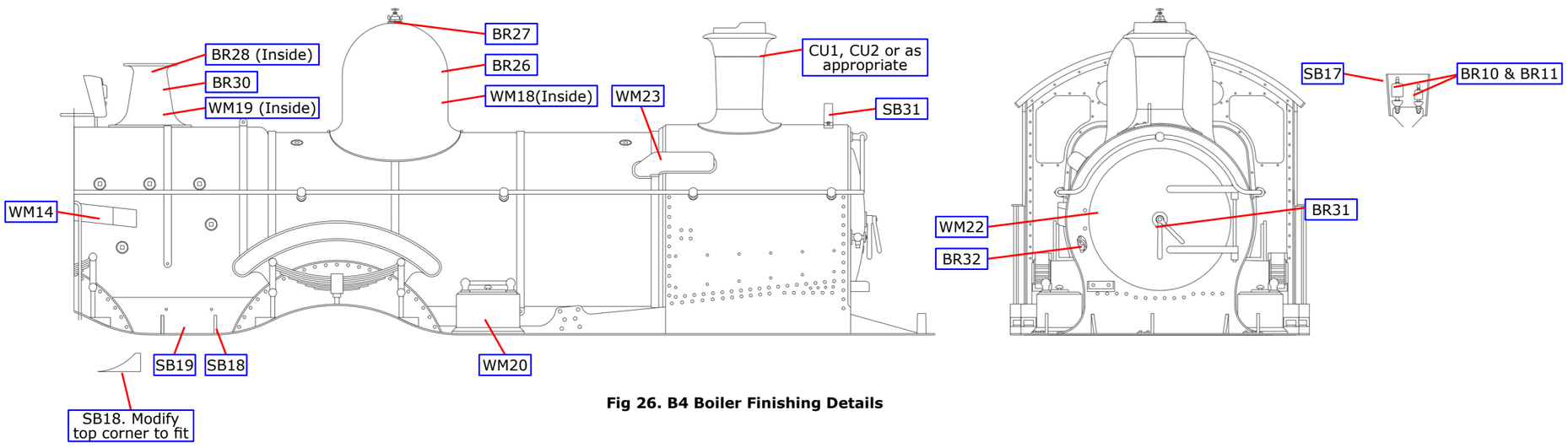

Fig 26. B4 Boiler Finishing Details

ETCH SHEET 1

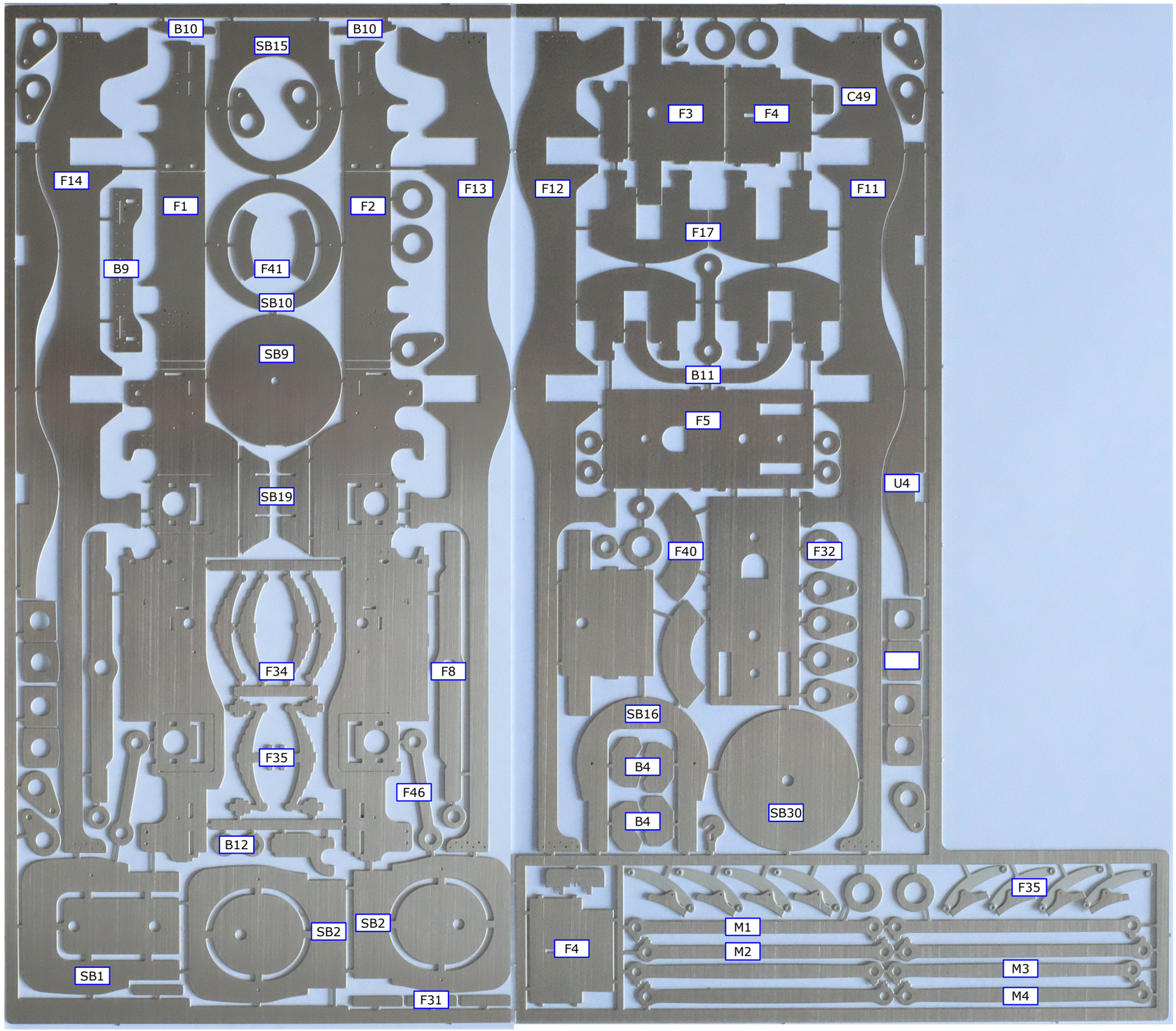
B10
SB15
B10
F3
F4
C49
F14
F1
F2
F13
F12
F11
F17
B9
F41
SB10
SB9
B11
F5
U4
SB19
F40
F32
F34
F8
SB16
F35
B4
F46
B4
SB30
B12
F35
SB2
SB2
M1
F4
M2
M3
SB1
M4
F31

ETCH SHEET 4

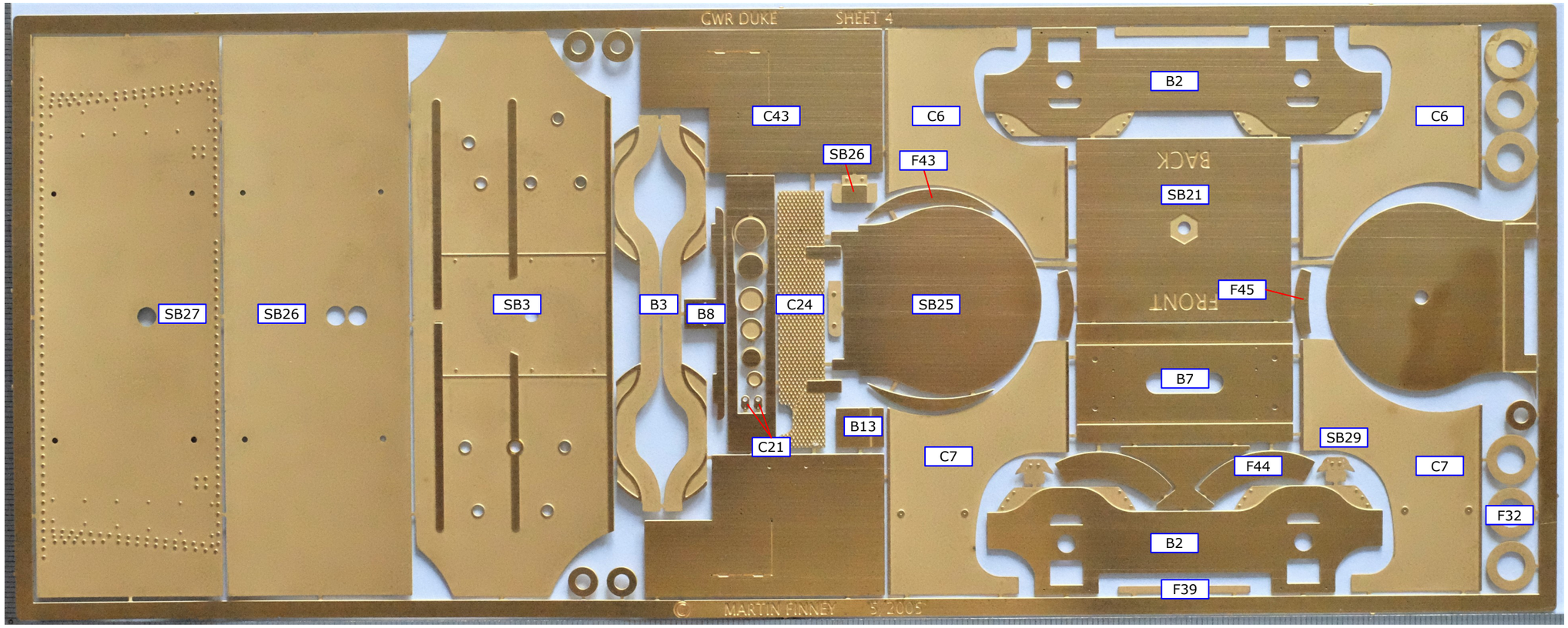
GWR DUKE
SHEET 4
B2
C6
C43
C6
SB26
F43
BACK
SB21
FRONT
F45
SB27
SB26
SB3
B3
B8
C24
SB25
B7
B13
SB29
C21
C7
F44
C7
F32
B2
F39
© MARTIN FINNEY 5/2005

ETCH SHEET 5

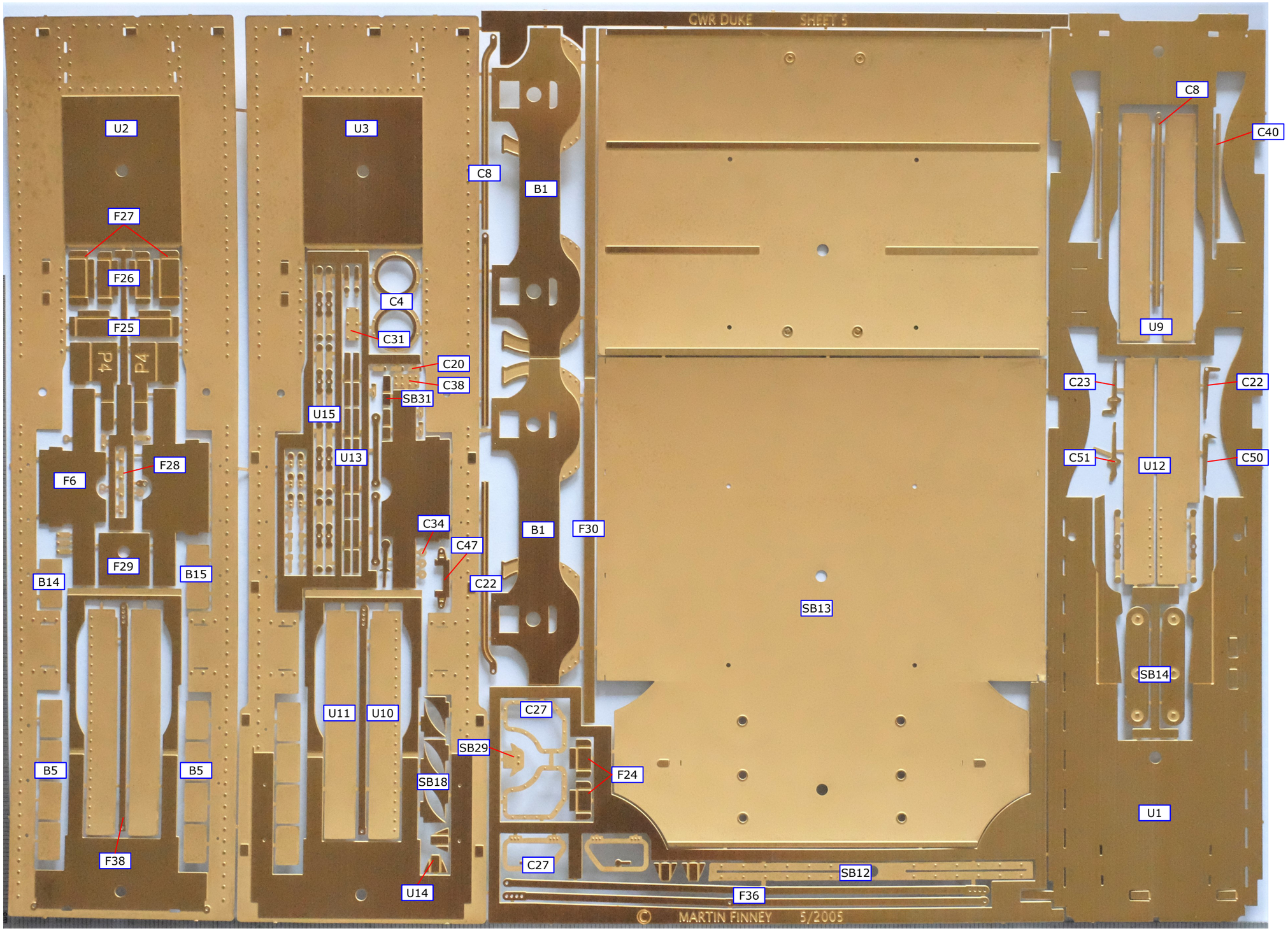
GWR DUKE SHEET 5
U2
F27
F26
F25
P4
P4
F6
F28
F29
B14
B15
B5
B5
F38
U3
C8
C4
C31
C20
C38
SB31
U15
U13
C34
C47
C22
U11
U10
SB29
SB18
U14
B1
B1
F30
C27
F24
C27
SB13
SB12
F36
© MARTIN FINNEY 5/2005
C8
C40
U9
C23
C22
C51
U12
C50
SB14
U1

ETCH SHEET 6

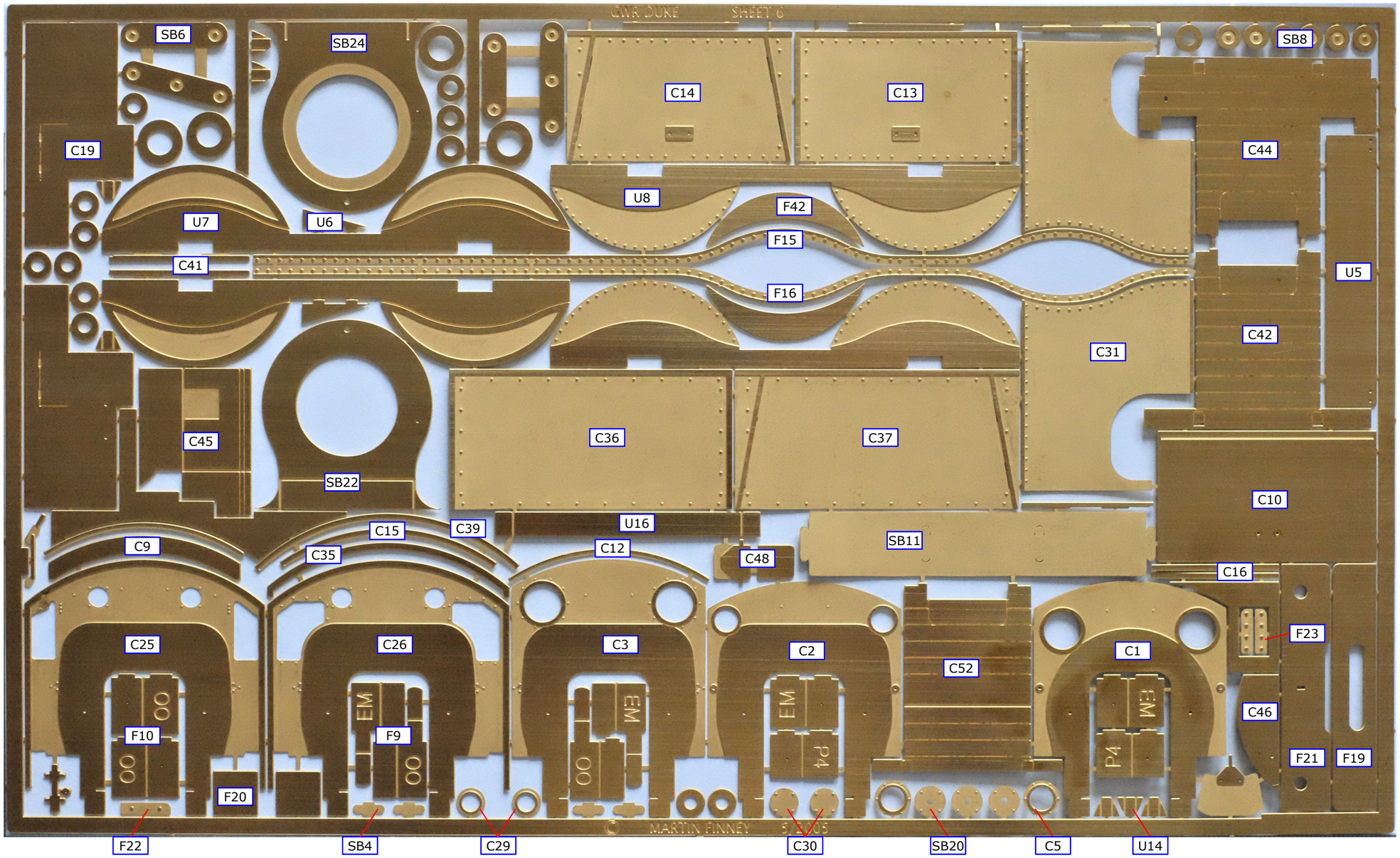
GWR DUKE
SHEET 6
SB6
SB24
SB8
C14
C13
C19
C44
U8
F42
U7
U6
F15
C41
U5
F16
C42
C31
C45
C36
C37
SB22
C10
U16
C15
C39
SB11
C9
C35
C12
C48
C16
C25
C26
C3
C2
C52
C1
F23
EM
EM
EM
EM
C46
OO
OO
OO
OO
P4
P4
F10
F9
F21
F19
F20
MARTIN FINNEY
F22
SB4
C29
C30
SB20
C5
U14

DUKE CASTINGS

BRASS CASTINGS

CU1	Parallel chimney	Duke 1
CU2	Taper Chimney	3232/1
BR1	ATC Shoe	Duke/4
BR2	Spring damper, leading	Atbara/1
BR3	Spring damper, trailing	Atbara/1
BR4	Steam brake cylinder, left hand	Atbara/1
BR5	Steam brake cylinder, right hand	Atbara/1
BR6	Tall early vacuum pipe	Duke/3
BR7	Short later vacuum pipe	Duke/3
BR8	Vacuum pipe dummy	Duke/3
BR9	Spring hangers (8)	Aberdare/2
BR10	Large whistle	Duke/5
BR11	Small whistle	Duke/5
BR12	Screw reverser handle	Duke/4
BR13	Boiler clack box (2)	Duke/3 & 5
BR14	Backhead shelf	Details/1
BR15	Water gauge	Duke/5
BR16	Regulator mounting	Duke/4
BR17	Regulator handle	Duke/5
BR18	Cab pressure gauges	Duke/3
BR19	Combined ejector/brake	Duke/4
BR20	Combined ejector/brake handle	Duke/5
BR21	Sight feed lubricator	Duke/5
BR22	Firebox door handle	Duke/4
BR23	Back plate clack box	Duke/3 & 5
BR24	Jockey valve	Duke/4
BR25	Regulator and jockey valve linkage	Duke/5
BR26	Dome	Duke/2
BR27	Dome lubricator	Duke/5
BR28	Safety valve (2)	Details/1
BR29	Safety valve casing, round top firebox	Duke/6
BR30	Safety valve casing, Belpaire firebox	Duke/3
BR31	Smokebox door handles	Duke/5
BR32	Steam lance cock	Duke/3
BR33	Outside cranks (4)	Cranks/2
BR34	ATC Bell	ATC/!
BR35	ATC Battery box	ATC/1

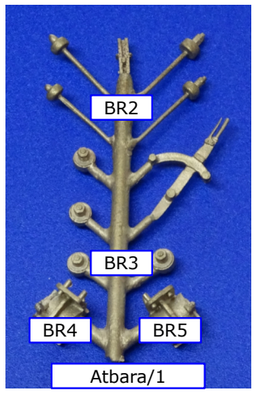

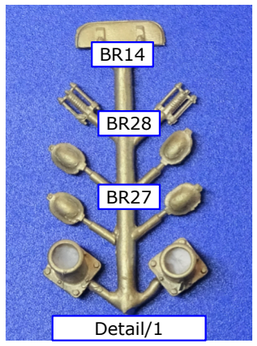

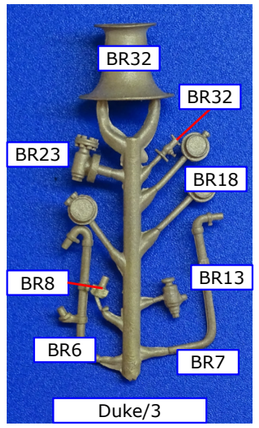

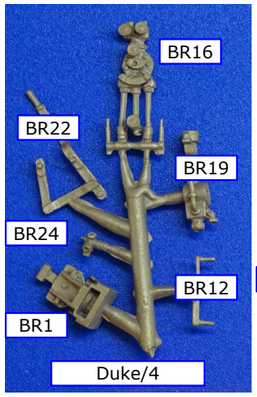

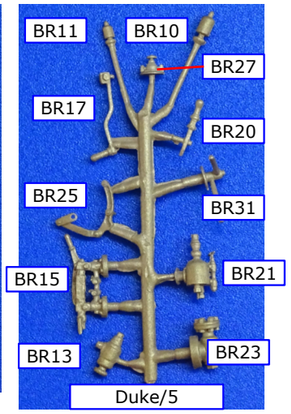

BR9

Aberdare/2

BR35

Cranks/2

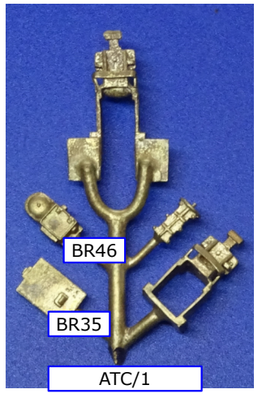

OTHER COMPONENTS

3/16" bore bearing (4)
2mm bearing for bogie (4)
6BA x 3/4" screw (2)
6BA x 5/16" screw (2)
6BA nut (3)
Buffer head, bush, washer & spring (2)
Short handrail knobs (8)
Medium handrail knob (5)
Vacuum pipe hose
4mm studding (75mm x 2), 4 brass & 4 stainless nuts

1/8" brass wire for compensation beam pivot
5/32" brass tube for compensation beams
0.8mm steel spring wire for bogie side control
0.45mm Brass wire for ATC conduit and cab side handrails
0.8mm Brass wire for brake hanger pivots, sand pipes and handrails
1.4mm Brass wire for top feed pipes
0.8mm, 1.2mm & 1.5mm (220mm & 20mm) Copper wire

WHITEMETAL CASTINGS

WM1	2	Bogie upper swing hanger
WM2	4	Bogie lower swing hangers
WM3	4	Bogie axlebox & spring
WM4	2	Dean taper buffer
WM5	2	Leading spring
WM6	2	Trailing spring
WM7	1	Screw reverser
WM8	1	Narrow cab reverser base
WM9	1	Wide cab reverser base
WM10	1	Wide cab with ATC reverser base
WM11	1	Right hand splasher box
WM12	1	Left hand splasher box
WM13	1	Firebox screw reverse cover
WM14	1	Round top firebox backplate
WM15	1	Belpaire firebox backplate
WM16	1	Topfeed
WM17	1	Tapered chimney
WM18	1	Inside of dome
WM19	1	Safety valve base (tall)
WM20	2	Sandbox
WM21	1	Original smokebox door with ring
WM22	1	Later smokebox door
WM23	1	Smokebox pipe cover
WM24	4	Mud hole covers