# BOGIE

## BOGIE

The bogie carries the weight of the rear of the locomotive and is the third balance point of the compensation system. Bogie clearance on curves is a particularly difficult problem with this prototype. The bogie is designed to be as close to the prototype as possible. Potential problem areas and possible solutions are:

Top of bogie frames foul underside of main frames - file to clear.
Wheels foul main frames - taper rear frames using alternative spacers.
Front wheels foul brake gear - use one of the alternative bogie pivots.
Front wheels foul tank balance pipes - File clearance on inside of balance pipes.

Clearly some experimenting will be required once you have decided on the gauge being used and the desirable minimum radius of curve to be negotiated.

Note that if you decide to use one of the alternative bogie pivot positions the weight of the rear of the locomotive is still carried by the bogie. This means the 6BA screw is still used, with a nut to retain the bogie, but that the slot in the bogie stretcher will need opening out so that the bogie will pivot freely about the alternative pivot. You may also decide to dispense with the side control wires. Emboss the rivets on the bogie frame (16) and form the guard irons to shape. Fold up the bogie stretcher (52 - use the middle width of the three) and solder in place in the slots in the frames. Note the slot for part 53 must be at the front.

Solder the axle boxes (B2 & B3) in place and the wire pins from 1.2 mm wire. Carefully ream the axle holes to 5/32" diameter.

Temporarily fit the wheels to check that the bogie is running true.

Using the bogie spring - middle lamination (18) as a guide, drill two 1.2 mm holes and a 1.6 mm hole into a block of wood or Tufnol and insert 1.2 mm wire into the two hanger holes and 1.6 mm wire into the pivot hole. These pieces of wire are used as a jig to accurately align the outer spring laminations (17 & 18) and the bogie equalising beams (19). Note the equalising beams are asymmetric - select carefully! Fold over through 180° the outer strips on part 17 (fold line on outside) before assembling all the components on the jig. Align carefully before soldering together.

Trim the wire pins to length leaving the 1.6 mm wire long at the back to enable the assembly to be located on the bogie through the 1.6 mm hole in the frames. Repeat for the other side. The side control springing can now be constructed as shown above soldering the spring wires at one end only. If appropriate, fold up the bogie pivot bracket (53) and solder in place.

## COUPLING RODS

The coupling rods should now be made up so that we can use them as a jig for fitting the front hornblocks accurately in place. Each rod is made up from an inner lamination (12) and an outer lamination (13). First drill out all the crankpin holes to a convenient size which is undersize for the crankpins. Remove all burrs caused by the drilling. Now drill the same drill into a suitable small block of wood and leave the drill in the wood with its shank projecting. This projecting shank is used as a mandrel to accurately align the two laminations of each rod.

Place the inner and outer laminates over the mandrel and using plenty of solder and flux solder the two laminates together. You should now have a rod with the bosses on each laminate perfectly aligned. The rods have been deliberately etched too large so that the thin etched edges can be carefully filed so that the laminated effect is lost and the rods appear to be made from one piece of metal. The crankpin holes now need carefully opening out until they just fit, with no free play, the ends of the hornblock alignment jigs.

## FRAMES

Having decided which chassis to construct you can now start construction by preparing the frames left and right (1 & 2).

To construct the kit as designed with a compensated chassis first open out the frame slots by cutting up the half etched lines. Now open out the following holes in the frames as shown in the drawing.

| | | |
|---|---|---|
| C | for compensation beam pivot | - 1/8 |
| B | for brake hanger pivots | - 0.8 mm |
| S | for rear brake cross shaft | - 2.0 mm |
| R | for reverse weigh shaft | - 1.8 mm |

For a short frame engine shorten the frames by breaking off along the half etched lines.

Form the frame joggle to narrow the frames at the rear. Make the first bend inwards through 30° along the front half etched line and strengthen the bend with a fillet of solder. Then make the second bend outwards in the same way.

Form the front guard irons to shape.

Solder one of the rear hornblocks (9) to the inside of the frame aligning it with the half etched lines and with the bottom of the frame.

| No. | Description | Sheet | | | |
|---|---|---|---|---|---|
| 1 | Frame Left | 2 | 18 | Bogie spring middle lamination (2) | 2 |
| 2 | Frame right | 2 | 19 | Bogie equalising beam (4) | 2 |
| 12 | Coupling rod inner lamination (2) | 1 | 52 | Bogie stretcher, three widths (1 each) | 2 |
| 13 | Coupling rod outer lamination (2) | 1 | 53 | Bogie pivot bracket | 2 |
| 16 | Bogie Frame (2) | 2 | 58 | Washer, bogie wheel | 2 |
| 17 | Bogie spring outer lamination (4) | 2 | | | |

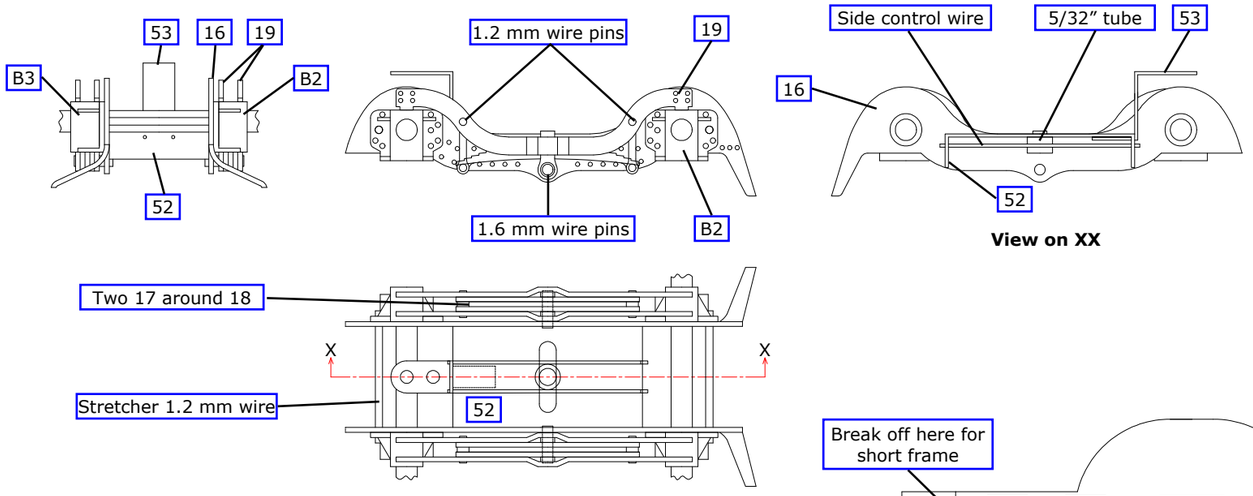


Fig 2. Bogie Construction

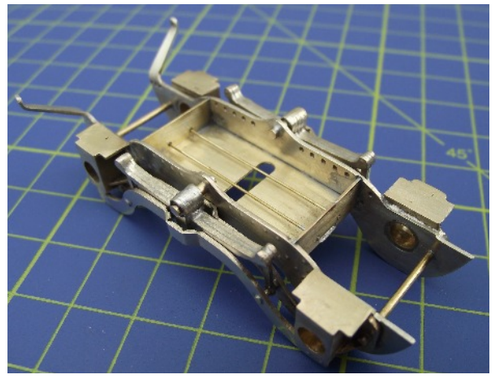

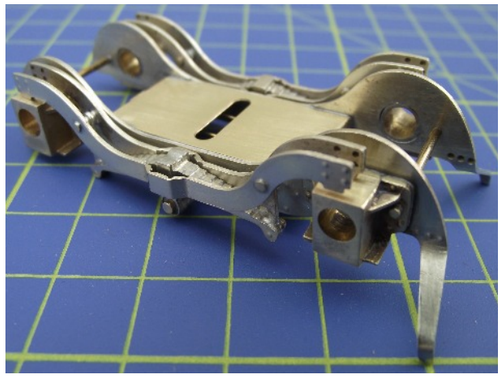

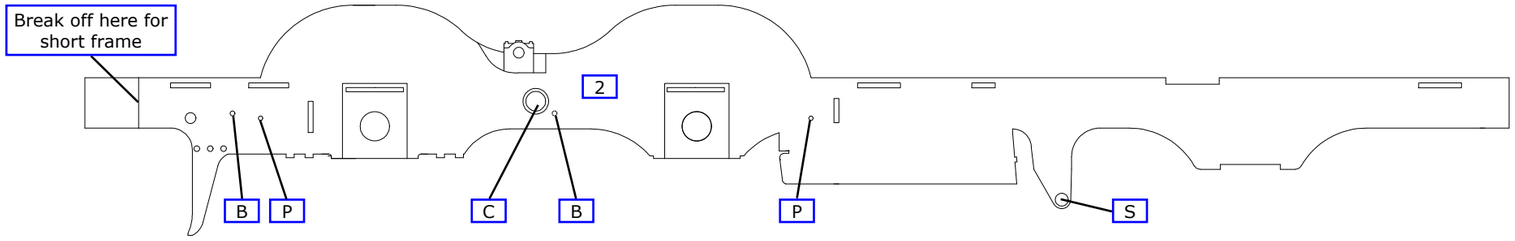


Fig 3. Frame Preparation

# FRAMES, SPACERS AND ASSEMBLING THE CHASSIS

## FRAMES

The prototype has a step in the frame just behind the firebox and is then parallel to the drag box. The model has the option to build up as per the prototype or to build with tapered rear frames.

Remove the spacers - front (3), middle (4), rear - parallel frames (5), rear - tapered frames (6), bogie pivot - parallel frames (7), and bogie pivot - tapered frames (8) to suit your chosen gauge.

Fold up the spacers making sure the half-etched fold lines are on the inside and that each bend is a right angle.

Emboss all the frame rivets.

Solder the 6BA bogie pivot screw in place through the hole in part 7 (or 8).

Check that all tabs on the spacers fit properly in their corresponding chassis slots so that the spacer is hard up against the inside of the frames. Now assemble the frames and spacers. Start by tack soldering part 4 to both sides. Check that everything is square and that the spacers are hard against the frames. If all is well solder the remaining spacers to the frames checking constantly that the chassis is square and the frames are straight.

## HORNBLOCKS

Prepare the remaining bearings and hornblocks (9). Place a bearing into the rear hornblock that is already soldered to the frame. Slide the second rear hornblock and bearing for the rear axle over a long piece of 3/16" rod with a spring between the bearings. Carefully compress the spring and clip the hornblock between the frames. Make sure the hornblock is square to the chassis and that its bottom edge aligns with the lower edge of the frames and that the long rod is at right angles to the frame before soldering the second hornblock in place.

Fit the two front hornblocks using a stepped hornblock alignment jig and spring in the same manner as for the rear hornblock. Slide the coupling rods onto the jig to give the correct spacing to the axle centres. Make sure the hornblock is square to the chassis and that its bottom edge aligns with the lower edge of the frames.

## COMPENSATION BEAMS

Cut a piece of 1/8" brass rod so that it fits through the holes C and is flush with the outside face of the chassis frames. Cut two equal pieces of 5/32" tube which together fit between the frames and solder the compensation beams (10) to the tube close to one end.

Temporarily fit the beams and all the wheels and axles and confirm that the compensation works properly and check that the chassis is sitting level. The bogie rests on a suitable selection of bogie pivot washers (59). When correctly set up the top of the frames should be 27.5 mm above rail level.

## FRAME OVERLAYS

Emboss all the rivets on the frame overlays - main frame overlay left and right (43 & 44), rear frame overlay left and right (45 & 46). Fold down the brackets for the sandpipes, front steps and injector pipes as required. Those not required can be broken off. Solder in place lengths of 0.8 mm wire for the brake hanger pivots. These then serve to accurately locate the overlays which are now tack soldered around their edges.

| No. | Description | Sheet | | | |
|---|---|---|---|---|---|
| 3 | Frame spacer front | 1 | 10 | Compensation beam (2) | 1 |
| 4 | Frame spacer middle | 1 | 59 | Washer bogie pivot | 1 |
| 5 | Frame spacer rear parallel frames | 1 | 43 | Main frame overlay , left | 1 |
| 6 | Frame spacer rear tapered frames | 1 | 44 | Main frame overlay, right | 1 |
| 7 | Frame spacer bogie pivot parallel frames | 1 | 45 | Rear frame overlay, left | 1 |
| 8 | Frame spacer bogie pivot tapered frames | 1 | 46 | Rear frame overlay, right | 1 |
| 9 | Hornguides (4) | 1 | | | |

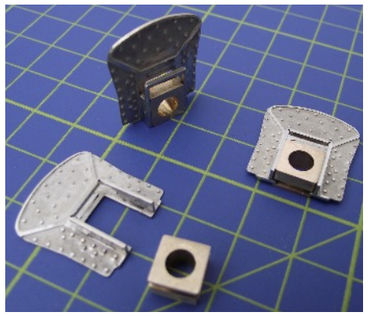

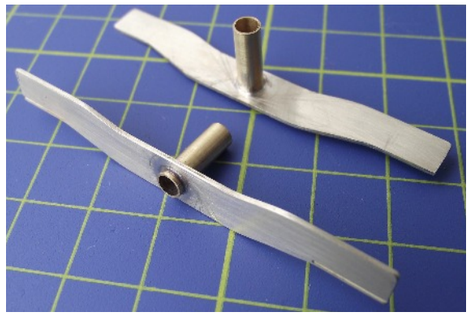

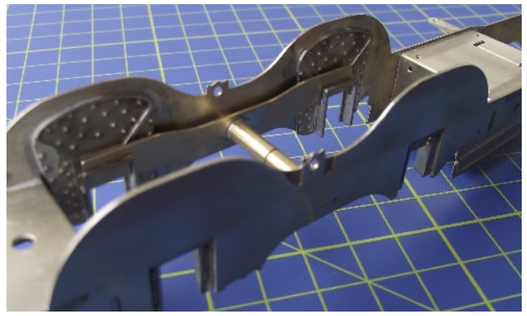

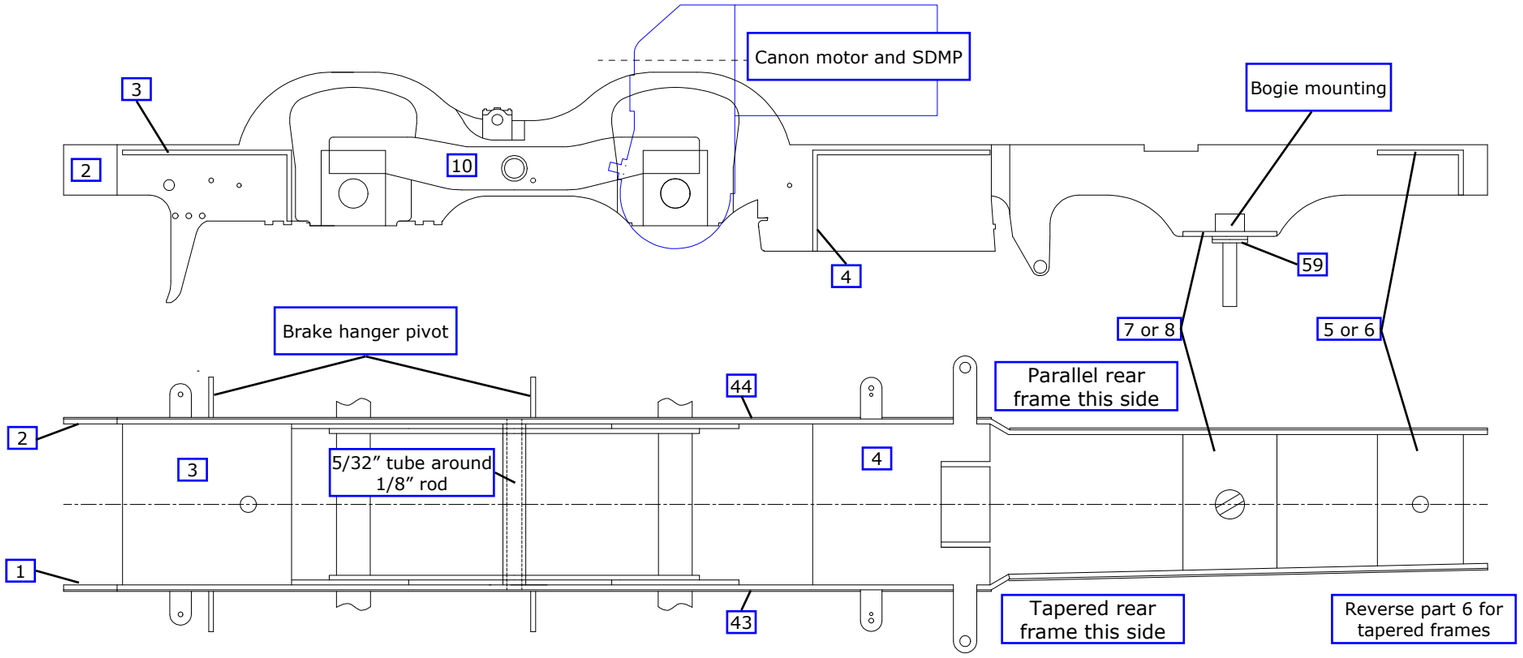


**Fig 4. Frame Construction**

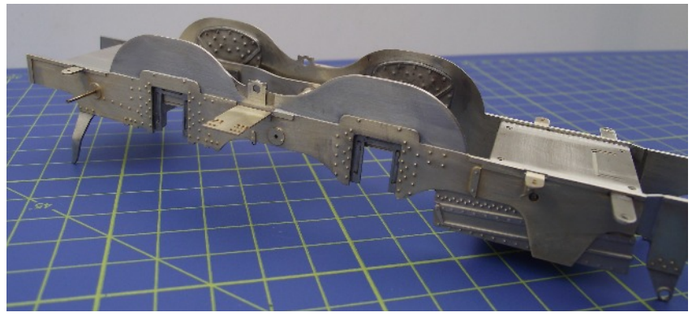

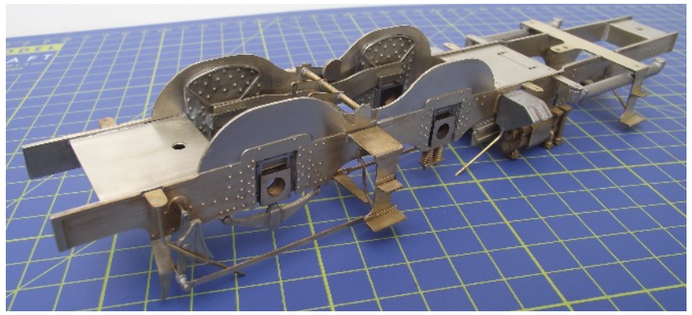

# FRAME DETAILING SHORT FRAME LOCOMOTIVE

**Wheels.** Attach the balance weights to the wheels using photographs as a guide to position. The leading axle balance weights are part 26. The crank axle weights are a choice between the early crank axle (27), an alternative crank axle (28)and the later crank axle (29). Locos with balanced cranks have no weights on their main driving wheels.

Assemble the wheel sets, bearings and rods selecting 3/16 axle washers (42) of appropriate thickness to control sideplay. Some sideplay on the coupled wheels is desirable to assist with negotiating curves. A thorough check of all clearances at this stage is important. You should now have a mechanically acceptable chassis. Now connect the motor to your pick-ups and test run.

**Springs.** The front springs are made up of two outer laminations (14) around a middle lamination (15). Solder up and then clean up in the same manner as the coupling rods. Attach each spring to the inside of the frame positioned centrally on the horn slide. The rear coil springs are casting B1 and these should be attached centrally to the rear horn slide. The axles are now retained by the springs as shown above.

**Steps.** Assemble the steps as shown in the drawing, the front steps are shown in Fig 8. The front steps, if required, fit into slots in the front step back (49). These slots take account of the different width across frames; for wide frames use the inner slots and vice versa. Fold the front step back to shape and attach the upper and lower steps (51 & 50) to the back. The 0.8 mm wire step stay should be curved to provide clearance on the coupling rods. The fronts steps can soldered into place in the slot in the main frames.

The rear step back (47) should be folded into shape and the lower rear step tread (48) and upper step tread (51) soldered in place. This assembly can then be soldered into place in the slot in the main frames. The step stays are made up out of 0.8 mm wire.

**Finishing the Chassis.** Complete the chassis detailing by fitting the sandboxes (W1, W2, W3 & W4), sandpipes from 0.8 mm wire, Duplex pumps (B5 & B6) and tank balance pipes (W5)as shown below.

**Weigh Shaft.** The weigh shaft is made from 1.8 mm wire cut to length so it is flush over the outside of the trunnions. The two lifting links (23) go on to the shaft and are soldered 10 mm apart symmetrically about the loco centre line. The balance arm and weight (25) is made up by folding over the parts of the lamination and soldering together. The reversing arm and reversing rod (24) should be threaded onto the left side of the weigh shaft, the balance arm goes on the right hand side. Thread the weigh shaft onto the trunnions and solder in place. The balance arm is soldered approximately 2 mm inside of the trunnion and the reversing arm is soldered up against the left hand trunnion.

**Brakes.** The brake arms and shoes are made up of two laminations, an inner (20) and a choice of outer between an early (21) and a later (22) type. Solder the brake hanger laminations together. The front set of brake arms are connected by 1.2 mm wire and the rear set are connected by a similar piece of wire to which a brake cross shaft is soldered (55). The front and rear sets are connected by the two brake pull rods that go outside the wheel sets. The brake pull rod (56) runs on the loco centre line to the brake shaft; this is made from a piece of 2.0 mm wire.

The brake lever part of 56 threads over the brake shaft before the brake shaft is soldered into position. The complete brake gear is shown in the diagram.

| No. | Description | Sheet | | | |
|---|---|---|---|---|---|
| 14 | Front spring outer lamination (4) | 2 | 27 | Balance weight crank axle early (2) | 1 |
| 15 | Front spring middle lamination (2) | 2 | 28 | Balance weight crank axle - alternative (2) | 2 |
| 20 | Brake hanger/shoe inner lamination (4) | 2 | 29 | Balance weight crank axle later (2) | 1 |
| 21 | Brake hanger/shoe outer lamination - early type (4) | 2 | 42 | Washer coupled wheel axles | 1 |
| 22 | Brake hanger/shoe outer lamination - later type (4) | 2 | 47 | Rear step back | 3 |
| 23 | Lifting arm and lifting link (2) | 2 | 48 | Rear step tread lower (2) | 2 |
| 24 | Reversing arm & reversing rod | 1 | 54 | Brake pull rod, front (2) | 2 |
| 25 | Reversing shaft balance arm & weight | 1 | 55 | Brake cross shaft | 2 |
| 26 | Balance weight leading axle (4) | 2 | 56 | Brake pull rod/lever, rear | 1 |

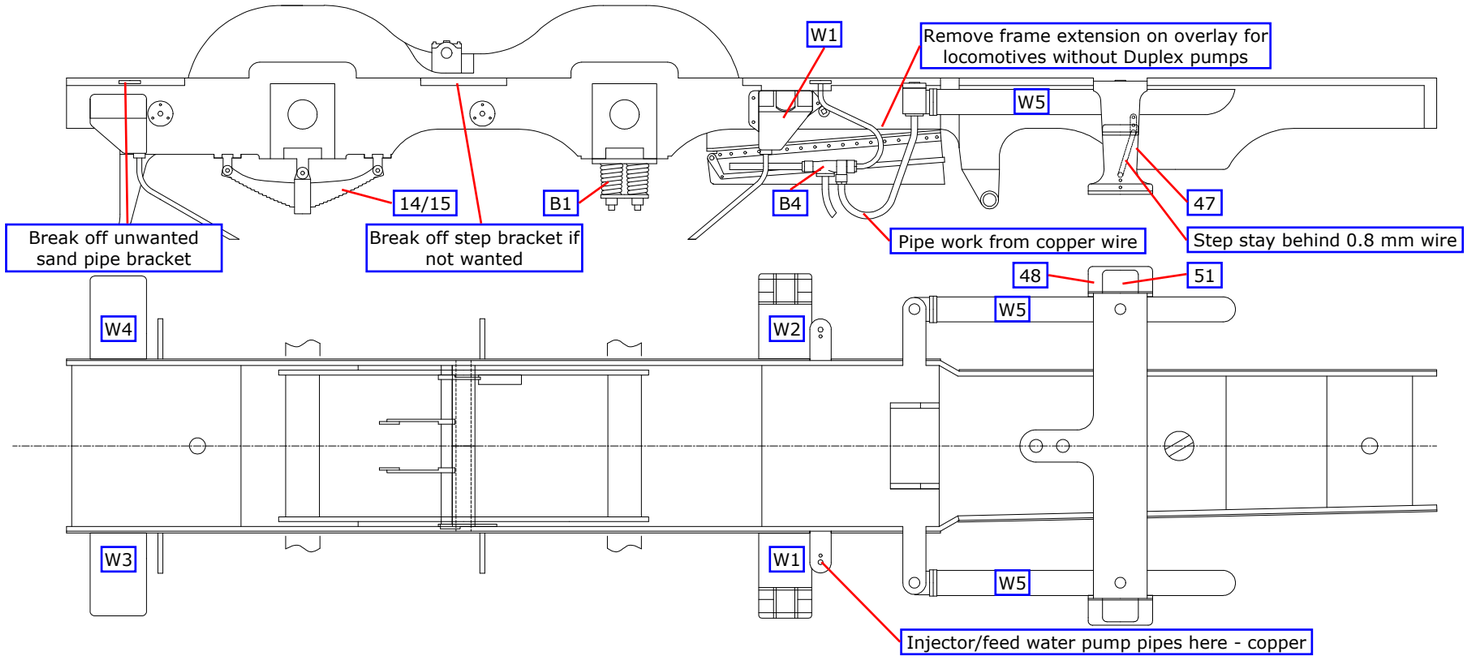


**Fig 5. Frame Detailing of Short Frame with Injectors. No Front Steps. Front Sandboxes below Footplate**

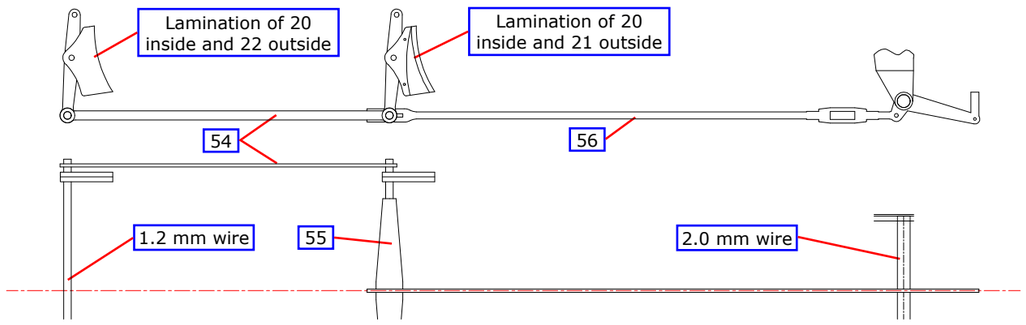


**Fig 7. Brakes**

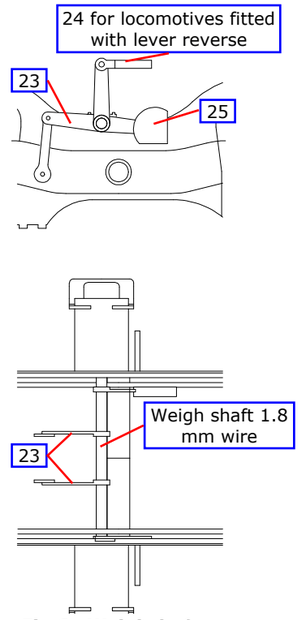


**Fig 6. Weighshaft**

# FRAME DETAILING LONG FRAME LOCOMOTIVE

**Wheels.** Attach the balance weights to the wheels using photographs as a guide to position. The leading axle balance weights are part 26. The crank axle weights are a choice between the early crank axle (27), an alternative crank axle (28)and the later crank axle (29). Locos with balanced cranks have no weights on their main driving wheels.

Assemble the wheel sets, bearings and rods selecting 3/16 axle washers (42) of appropriate thickness to control sideplay. Some sideplay on the coupled wheels is desirable to assist with negotiating curves. A thorough check of all clearances at this stage is important. You should now have a mechanically acceptable chassis. Now connect the motor to your pick-ups and test run.

**Springs.** The front springs are made up of two outer laminations (14) around a middle lamination (15). Solder up and then clean up in the same manner as the coupling rods. Attach each spring to the inside of the frame positioned centrally on the horn slide. The rear coil springs are casting B1 and these should be attached centrally to the rear horn slide. The axles are now retained by the springs as shown above.

**Steps.** Assemble the steps as shown in the drawing. The front steps, if required, fit into slots in the front step back (49). These slots take account of the different width across frames; for wide frames use the inner slots and vice versa. Fold the front step back to shape and attach the upper and lower steps (51 & 50) to the back. The 0.8 mm wire step stay should be curved to provide clearance on the coupling rods. The fronts steps can soldered into place in the slot in the main frames.

The rear step back (47) should be folded into shape and the lower rear step tread (48) and upper step tread (51) soldered in place. This assembly can then be soldered into place in the slot in the main frames. The step stays are made up out of 0.8 mm wire.

**Finishing the Chassis.** Complete the chassis detailing by fitting the sandboxes (W1, W2, W3 & W4), sandpipes from 0.8 mm wire, Duplex pumps (B5 & B6) and tank balance pipes (W5)as shown below.

**Weigh Shaft.** The weigh shaft is made from 1.8 mm wire cut to length so it is flush over the outside of the trunnions. The two lifting links (23) go on to the shaft and are soldered 10 mm apart symmetrically about the loco centre line. The balance arm and weight (25) is made up by folding over the parts of the lamination and soldering together. The reversing arm and reversing rod (24) should be threaded onto the left side of the weigh shaft, the balance arm goes on the right hand side. Thread the weigh shaft onto the trunnions and solder in place.

The balance arm is soldered approximately 2 mm inside of the trunnion and the reversing arm is soldered up against the left hand trunnion.

**Brakes.** The brake arms and shoes are made up of two laminations - an inner (20) and a choice of outer between an early (21) and a later (22) type. Solder the brake hanger laminations together. The front set of brake arms are connected by 1.2 mm wire and the rear set are connected by a similar piece of wire to which a brake cross shaft is soldered (55). The front and rear sets are connected by the two brake pull rods that go outside the wheel sets. The brake pull rod (56) runs on the loco centre line to the brake shaft; this is made from a piece of 2.0 mm wire. The brake lever part of 56 threads over the brake shaft before the brake shaft is soldered into position. The complete brake gear is shown in the diagram.

| No. | Description | Sheet | | | |
|---|---|---|---|---|---|
| 14 | Front spring outer lamination (4) | 2 | 28 | Balance weight crank axle - alternative (2) | 2 |
| 15 | Front spring middle lamination (2) | 2 | 29 | Balance weight crank axle later (2) | 1 |
| 20 | Brake hanger/shoe inner lamination (4) | 2 | 47 | Rear step back | 3 |
| 21 | Brake hanger/shoe outer lamination - early type (4) | 2 | 48 | Rear step tread lower (2) | 2 |
| 22 | Brake hanger/shoe outer lamination - later type (4) | 2 | 49 | Front step back (2) | 2 |
| 23 | Lifting arm and lifting link (2) | 2 | 50 | Front step tread, lower (2) | 2 |
| 24 | Reversing arm & reversing rod | 1 | 51 | Front and rear step, upper (4) | 2 |
| 25 | Reversing shaft balance arm & weight | 1 | 54 | Brake pull rod, front (2) | 2 |
| 26 | Balance weight leading axle (4) | 2 | 55 | Brake cross shaft | 2 |
| 27 | Balance weight crank axle early (2) | 1 | 56 | Brake pull rod/lever, rear | 1 |

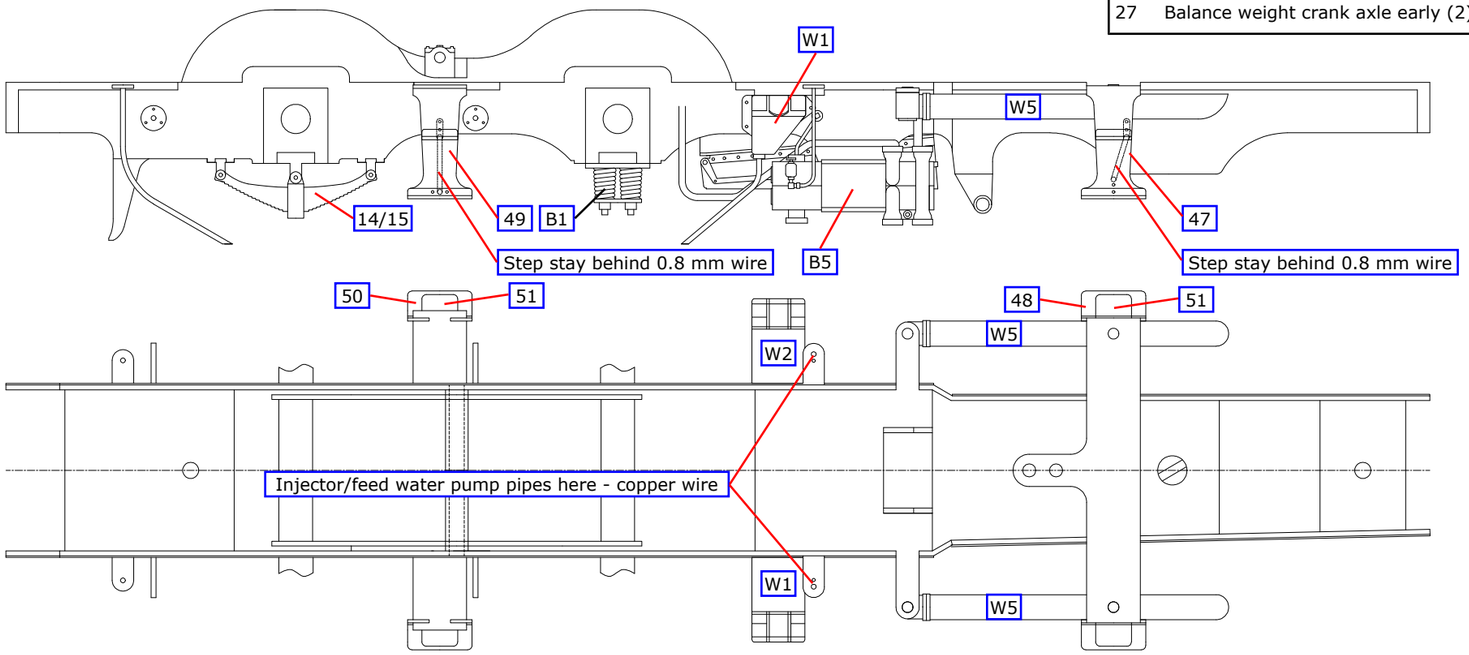


**Fig 8. Frame Detailing of Long Frame with with Duplex Feed Pumps. Front Steps. Front Sandboxes above Footplate**

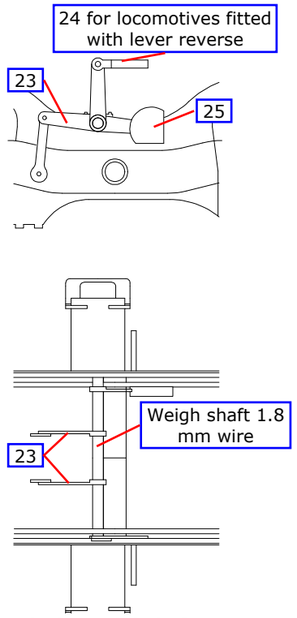


**Fig 9. Weighshaft**

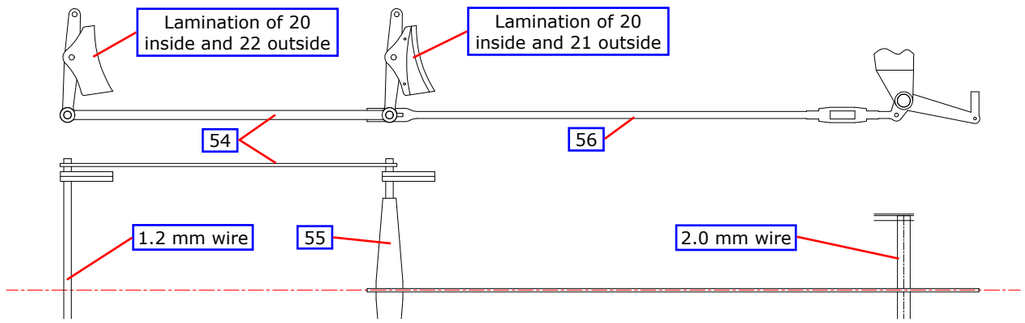


**Fig 10. Brakes**

# FOOTPLATE

For a short frame locomotive shorten the footplate (60) by breaking off along the half etched line. Fold up the footplate valences followed by the cylinder cover sides, section of frames behind the splashers, coupling rod splasher front and the cab floor supports.

Shorten the footplate overlay at the front for a short frame locomotive. Temporarily join the footplate overlay (61) to the footplate with a screw through the body fixing holes at the rear and aligning the sand rod pivot holes at the front. Check the alignment of the tank/bunker slots before soldering together all round. Solder a 6BA nut over the rear fixing hole. File coupling rod clearance slots in the footplate for the rear coupled axle. Make them the same as those for the front axle.

Select the appropriate valence overlays - either short frame (66), long frame (67), right with brackets short frame (68) or right with brackets long frame (69). Solder into position.

If appropriate, emboss the rivets on the front bufferbeam (64) and rear bufferbeam (65) and solder in place.

Curve the coupling rod splasher tops (77) to shape by rolling underneath a suitable rod or dowel on a resilient surface (a piece of hard rubber sheet) and solder in place in the half etched rebate along the edge of the splasher front.

Insert the appropriate splasher fronts - combined splasher front (72) or separate splasher front (75) and bend over the aligning tabs under the footplate. Similarly fit the splasher tops - the combined splasher top curved section (74) or the separate splasher top (76) but not the combined splasher top front section (73) at this stage; it is fitted as the smokebox is completed.

Attach the sanding rods left and right (78 & 79) using 0.45 mm wire as pivots.

| No. | Description | Sheet | | | |
|---|---|---|---|---|---|
| 60 | Footplate | 2 | 72 | Combined splasher front (2) | |
| 61 | Footplate overlay | 2 | 73 | Combined splasher top, front section (2) | 2 |
| 64 | Front buffer beam | 1 | 74 | Combined splasher top, curved section (3) | 1 & 3 |
| 65 | Rear buffer beam | 1 | 75 | Separate splasher front (2) | 1 |
| 66 | Valance overlay, short frame (2) | 2 | 76 | Separate splasher top (2) | 3 |
| 67 | Valance overlay, long frame (2) | 2 | 77 | Coupling rod splasher top (2) | 1 |
| 68 | Valance overlay, right with brackets short frame | 2 | 78 | Sanding rod, left | 2 |
| 69 | Valance overlay, right with brackets long frame | 2 | 79 | Sanding rod, right | 2 |

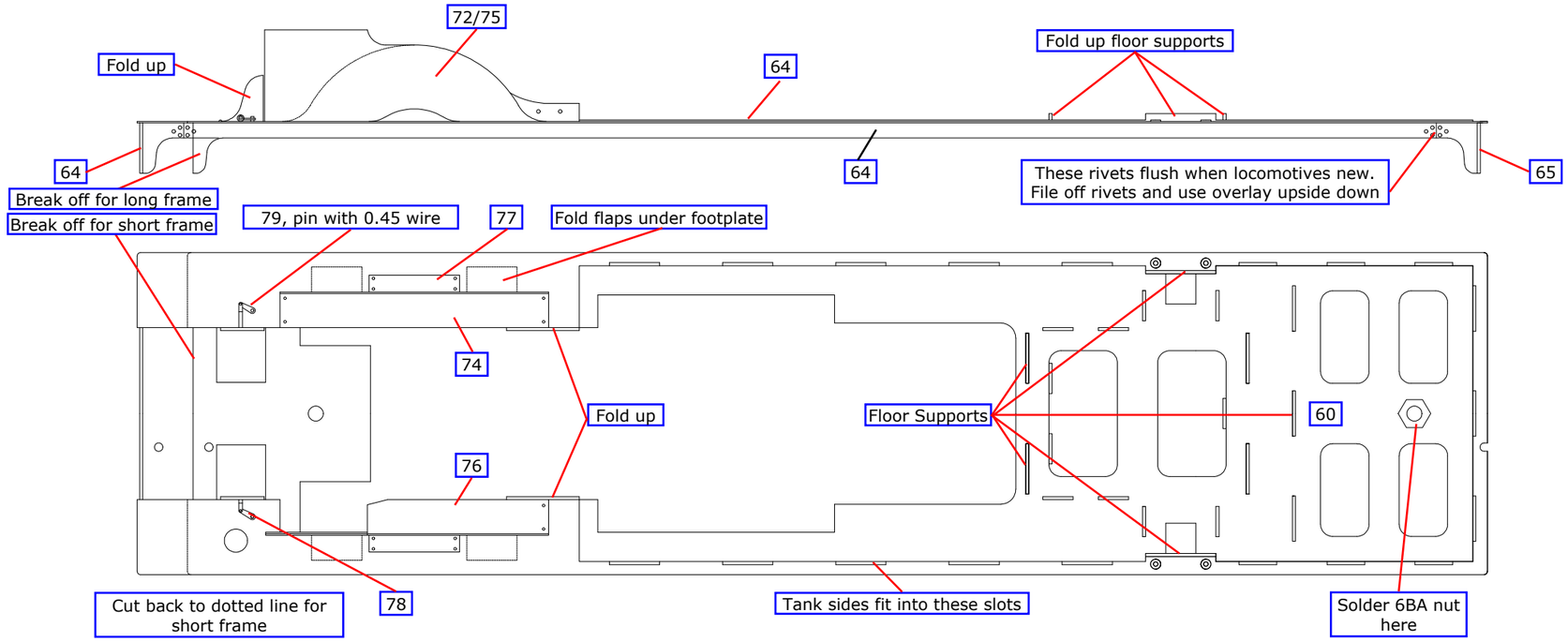


**Fig 11. Footplate**

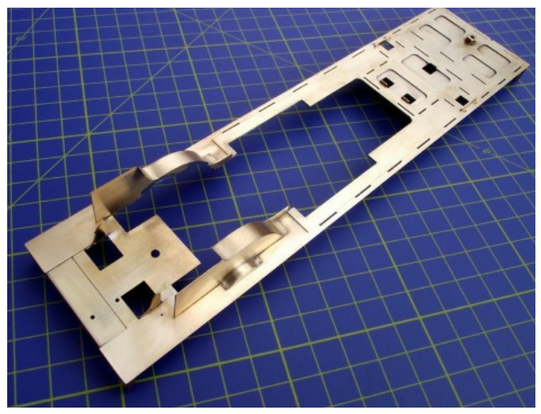

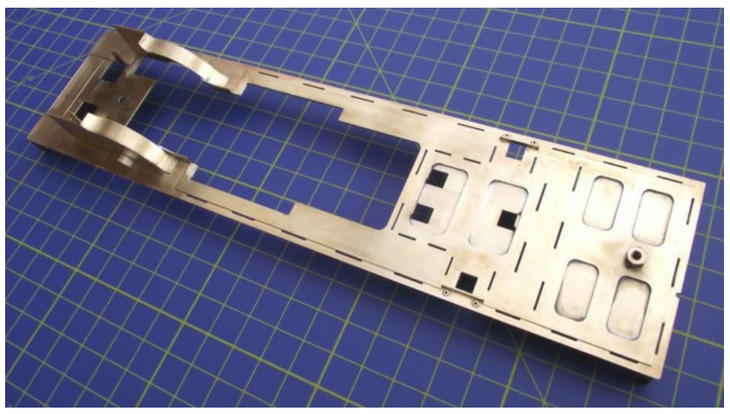

# BOILER & SMOKEBOX

**Boiler.** The forward handrail knob hole has to be drilled in the boiler wrapper to suit your locomotive. The earliest locomotives had it in a rear position and later locomotives had it close to the smoke box. The dimension is either 4.4 mm or 16.6 mm from the front edge and in line with the rear handrail knob hole. Drill the hole in the boiler wrapper - either no bands (94), so you can make your own bands, or with bands (95).

Roll the wrapper and check the fit on the formers, the rear, middle and front (31,32 & 33).

Solder the wrapper ends together using the boiler joining strip (96) and solder in the front former (33).

Now solder the middle former (32) and rear former (31) in place with the notch in the top of the rear former aligned with the notch in the wrapper.

Represent the bolts in the joining brackets using 0.45 mm wire.

Solder two short lengths of 0.8 mm wire in place in the rear former to act as aligning dowels with the cab front.

Tap the hole in the boiler front former 6BA so that the smokebox rear plate (82), the smokebox/boiler ring (30) and the boiler can be screwed together.

**Smokebox.**

If appropriate emboss the rivets on the smokebox base/sides/back (81) before folding up.

Solder a 6BA nut over the fixing hole.

If appropriate, emboss the rivets and drill holes for the smokebox door dogs (B12) in the appropriate smokebox front - either combined with splashers (83), wing plates sandboxes in smokebox (84) or wing plates removed (85) before soldering to part 81.

Drill any additional holes appropriate in the smokebox wrapper - either no rivets or riveted (86 or 87) using the template in Fig 13a.

Roll the smokebox wrapper to shape. Note part 86 is designed to be used with the etched surface inwards. Now solder the wrapper in place with the lower edges inside part 81.

The rear face of the smokebox/boiler ring needs to be rounded as shown in the drawing.

If modelling the smokebox sandboxes, the smokebox sand pipe flanges (88) and the smokebox sandbox fillers (89)needs to be fitted to the side of the smokebox as indicated in Fig 18. Also fit the smokebox sandbox filler as shown in Fig 18.

| No. | Description | Sheet | | | |
|---|---|---|---|---|---|
| 30 | Smokebox/Boiler ring | 2 | 85 | Smokebox front, wing plate removed | 1 |
| 31 | Boiler rear former | 1 | 86 | Smokebox wrapper, no rivets | 3 |
| 32 | Boiler middle former | 2 | 87 | Smokebox wrapper, riveted | 3 |
| 33 | Boiler front former | 2 | 88 | Smokebox sand pipe flange | 2 |
| 81 | Smokebox base/sides/back | 1 | 89 | Smokebox sandbox filler | 2 |
| 82 | Smokebox rear plate | 1 | 94 | Boiler wrapper, no bands | 3 |
| 83 | Smokebox front, sandboxes combined with splashers | 3 | 95 | Boiler wrapper, with bands | 1 |
| 84 | Smokebox front, wing plates (sandboxes in smokebox) | 1 | 96 | Boiler joining strip | 2 |

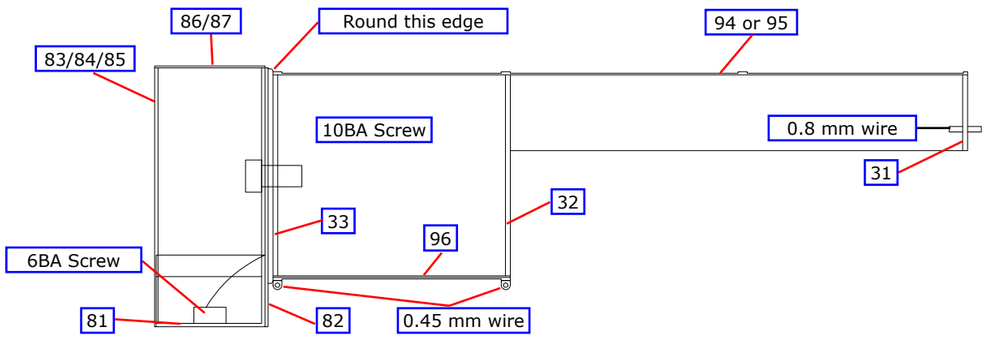


**Fig 12. Boiler and Smokebox**

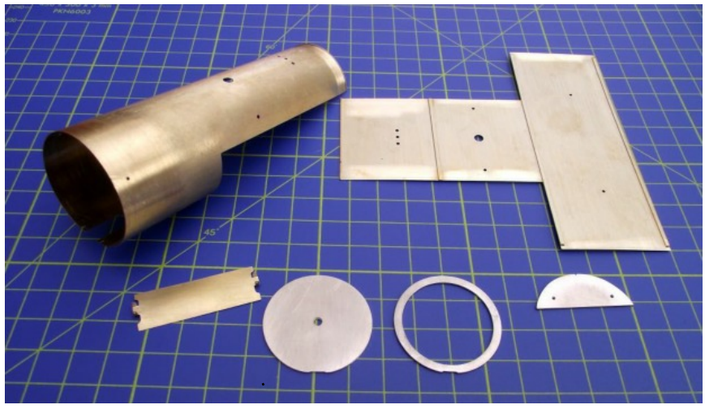

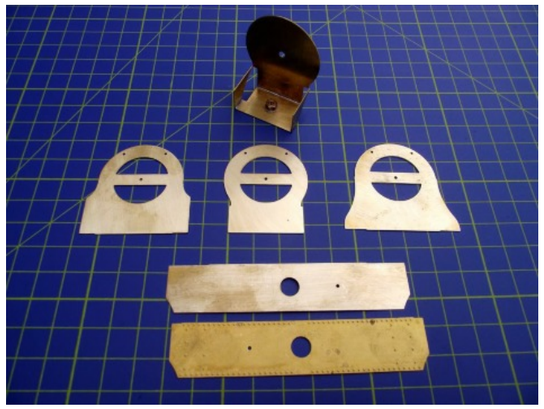

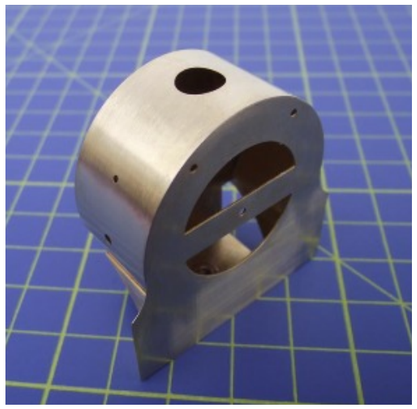

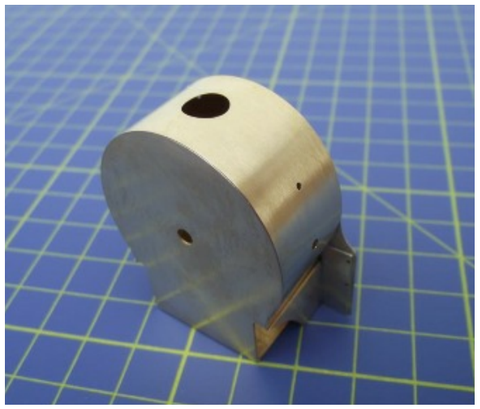

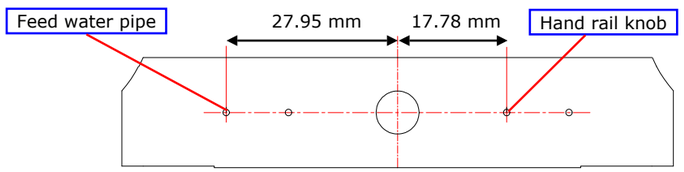


**Fig 13. Smokebox Template Master**

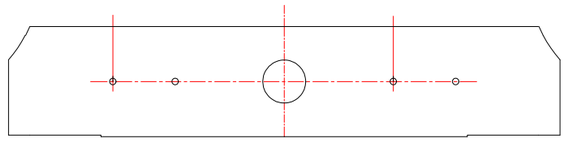

**Fig 13a. Smokebox Template to Use**

# CAB

**Cab Front & Back.** Solder the cab spectacle window frame (116) in place on the cab front (115). If fitting steam reverse drill out the holes for the steam reversing lever (B27) if appropriate, before folding it to shape and soldering in place in the slots in the footplate.

Now check the fit of the smokebox and boiler with the cab front. If all is well continue by detailing the cab rear lower (122) with the coal door (123) and a handle from 0.45 mm wire. Fold up and solder in place in the footplate slots.

Solder the cab floor (125) in place. The cab seat tops can now be added, the front (126) and the rear (127).

**Cab Interior.** The details of the cab are shown above. There are some choices to be made about reversing levers. The steam reversing lever is a brass casting (B27) which fits onto three holes on the left hand seat. The steam reverse indicator (145) fits below the casting.

The manual reversing lever is built up from a base (37) the bottom of which folds up to form a U tray to hold the lever. Solder a 0.45 mm wire into the two upper holes to mount the quadrant plate (38). There are two reversing levers, one with a ratchet release (35) and one without a ratchet release (36). Solder the lever reverse ratchet release (146) to the lever. This lever is held in the base with a piece of 0.45 mm wire. Solder the quadrant plate (38) onto the two pins. The reversing lever can now be soldered to the cab floor.

Attach the cab doors (128) into the door way. The brake column (W12) can be soldered into the floor and the brake handle (B28)can be added. There is no need to fix the back plate (W11) in place at this stage. Form the curve along the lower edge of the cab rear inner overlay (117).

If appropriate make up the cab window bars - frame and outer bars (119), centre bar (120) and intermediate bars (121) and fix in place over the rear windows on the cab rear outer overlay (118).

Solder the cab rear inner and outer overlays together before fixing in place in the footplate slots ensuring the cab rear is upright. Form the tank vent pipe from 1.2 mm wire and solder in place in the half etched slot in the cab back.

**Backplate.** Remove 1.75 mm from the lower edge of the backplate casting (W11).

Using the drawing of the cab interior the backplate can be assembled and the cab interior detailed.

Start by assembling the fire hole door using the following etches the fire hole (148), the fire hole door flap (151) the fire hole door ratchet (150) and the fire hole door lever (149). The drawing shows how to assemble the door using some 0.45 mm and 1.2 mm wire. Fit the door assembly using either solder or epoxy glue.

The main castings are the ejector/brake (B23), the two water gauges (B22), the early or late regulator handle (B24 or B25), the steam heating valve (B26). The brake handle (39) fits onto the side of the ejector/brake while the ejector handle (152) fits onto the front of the ejector brake. Fit the hand wheels (153) and the cab pressure gauges as shown below The blower valve hand wheel fits on the left side main handrail extended into the cab.

| No. | Description | Sheet | | | |
|---|---|---|---|---|---|
| 35 | Reversing lever with ratchet release | 1 | 125 | Cab floor | 2 |
| 36 | Reversing lever without ratchet release | 1 | 126 | Cab seat top, front (2) | 3 |
| 37 | Reversing lever mounting plate | 1 | 127 | Cab seat top, rear (2) | 1 |
| 38 | Reversing lever quadrant plate | 1 | 128 | Cab door (2) | 2 |
| 39 | Brake ejector handle | 1 | 146 | Lever reverse ratchet release | 1 |
| 115 | Cab front | 1 | 145 | Steam reverse indicator | 3 |
| 116 | Cab spectacle window frame (2) | 2 | 146 | Lever reverse ratchet release | 1 |
| 117 | Cab rear inner overlay | 1 | 147 | Cab pressure gauges (3) | 2 |
| 118 | Cab rear, outer overlay | 1 | 148 | Fire hole | 1 |
| 119 | Cab window bars, frame and outer bars (2) | 2 | 149 | Fire hole door handle | 1 |
| 120 | Cab window bars - centre bars (2) | 1 | 150 | Fire hole door handle ratchet | 1 |
| 121 | Cab window bars, intermediate bars (4) | 2 | 151 | Fire hole door flap | 1 |
| 122 | Cab rear, lower | 2 | 152 | Ejector handle | 2 |
| 123 | Coal door | 2 | 153 | Handwheel (3) | 2 |
| 124 | Coal shovelling plate side quadrant | 1 | 80 | Steam pipe valve handle (2) | 2 |

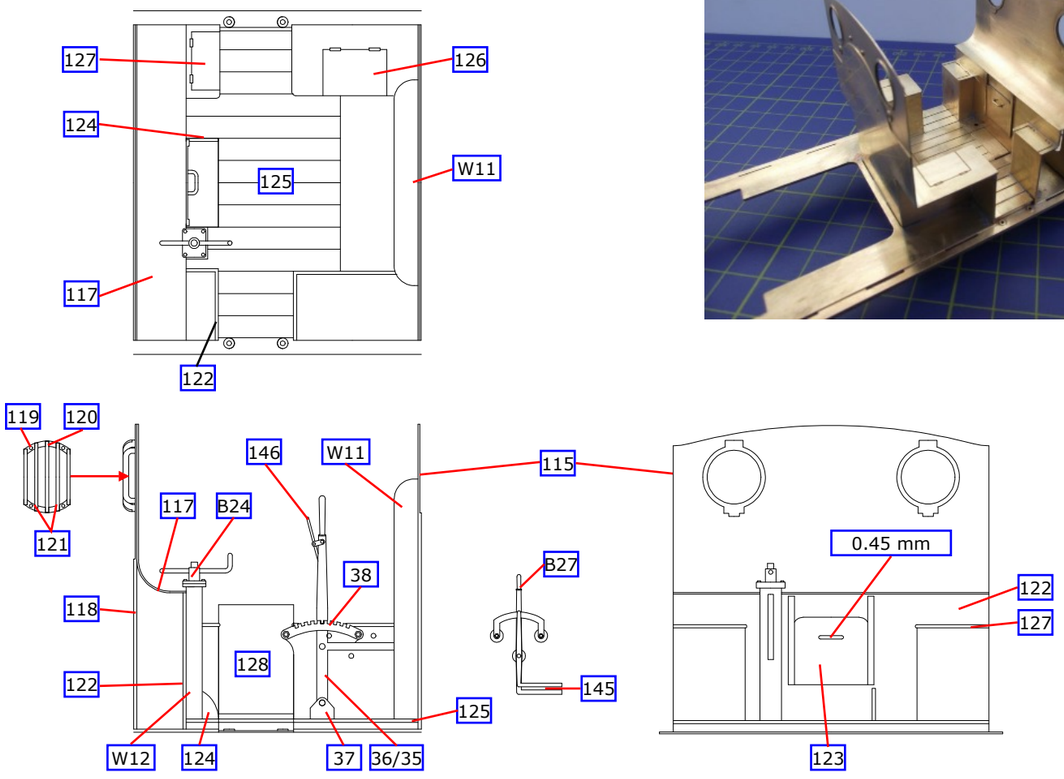


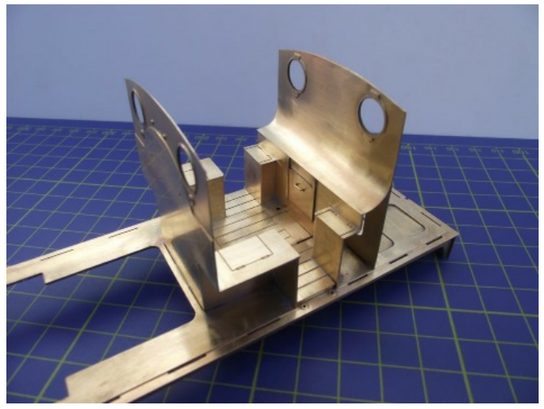

Fig 14. Cab Construction

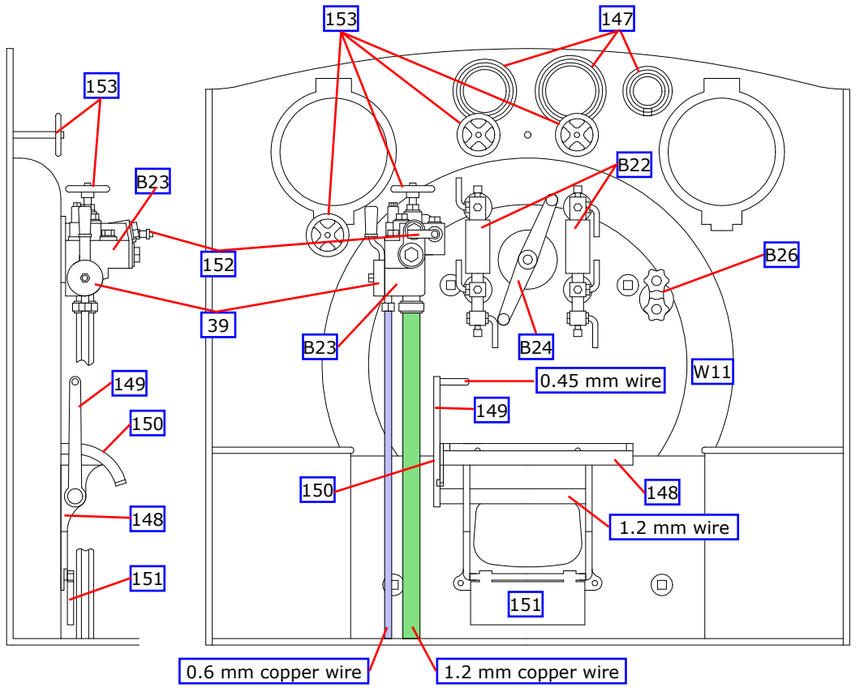


Fig 15. Backplate, a photograph is on page 13

# SMOKEBOX DETAILS

Before the tanks are fitted, the boiler smokebox assembly must be permanently fixed in place. This is best done after completing as much of the detailing work on these assemblies as possible. The detailing should include the handrail and lamp brackets.

After permanently attaching the smokebox/boiler, form the cylinder cover - short frame or long frame (62 or 63) and solder in place between the frame extensions.

Add the cylinder cover knob (B17), the separate splasher tops (76), the sandbox lids (B15).

Also fit, as appropriate the etches for either the wing plate/footplate angle vertical, separate sandboxes (90) and wing plate/footplate angle horizontal, separate sandboxes (91) or the wing plate/footplate angle vertical, combined sandboxes (92) and wing plate/footplate angle horizontal, combined sandboxes (93).

If appropriate, fit the combined splasher top, front section (73).

| No. | Description | Sheet |
|---|---|---|
| 62 | Footplate overlay/cylinder cover, short frame | 2 |
| 63 | Footplate overlay/cylinder cover, long frame | 2 |
| 76 | Separate splasher top (2) | 3 |
| 90 | Wing plate/footplate angle vertical, separate sandboxes (2) | 2 |
| 91 | Wing plate/footplate angle horizontal, separate sandboxes (2) | 2 |
| 92 | Wing plate/footplate angle vertical, combined sandboxes (2) | 2 |
| 93 | Wing plate/footplate angle horizontal, combined sandboxes (2) | 2 |
| 134 | LSWR Lamp bracket, footplate (6) | 2 |
| 135 | LSWR Lamp bracket, smokebox side (2) | 2 |
| 136 | LSWR Lamp bracket, smokebox top | 2 |
| 138 | LSWR/SR Lamp bracket, footplate (6) | 2 |
| 139 | LSWR/SR Lamp bracket, smokebox side (2) | 2 |
| 140 | LSWR/SR Lamp bracket, smokebox top | 2 |
| 142 | SR Lamp bracket, footplate (6) | 2 |
| 143 | SR Lamp bracket, smokebox side (2) | 2 |
| 144 | SR Lamp bracket, smokebox top & bunker rear (4) | 2 |

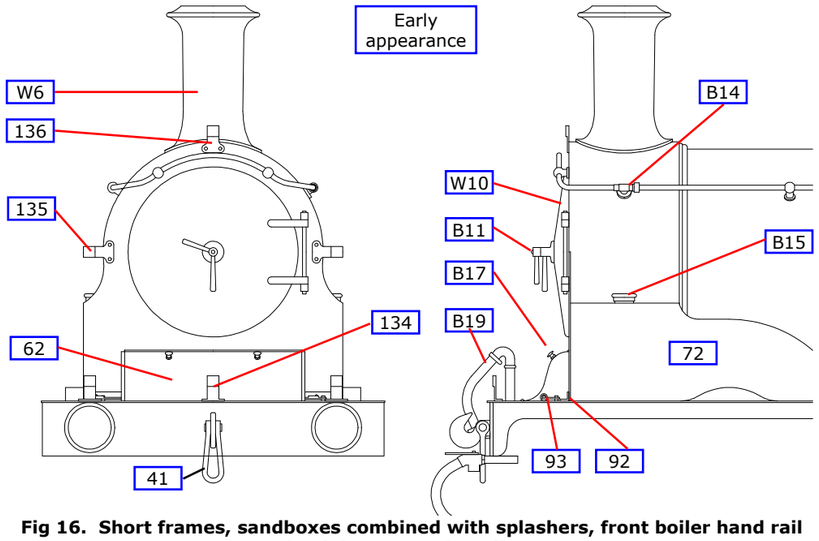


**Fig 16. Short frames, sandboxes combined with splashers, front boiler hand rail knob in rearmost position**

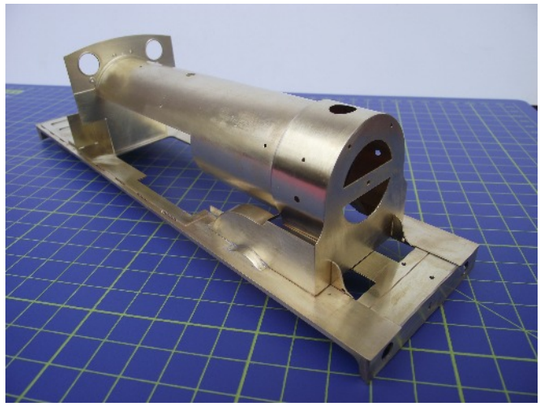

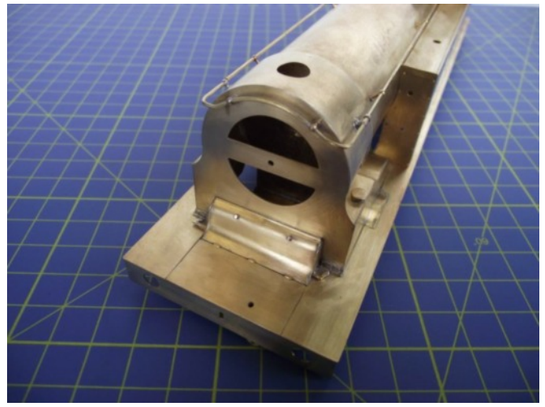

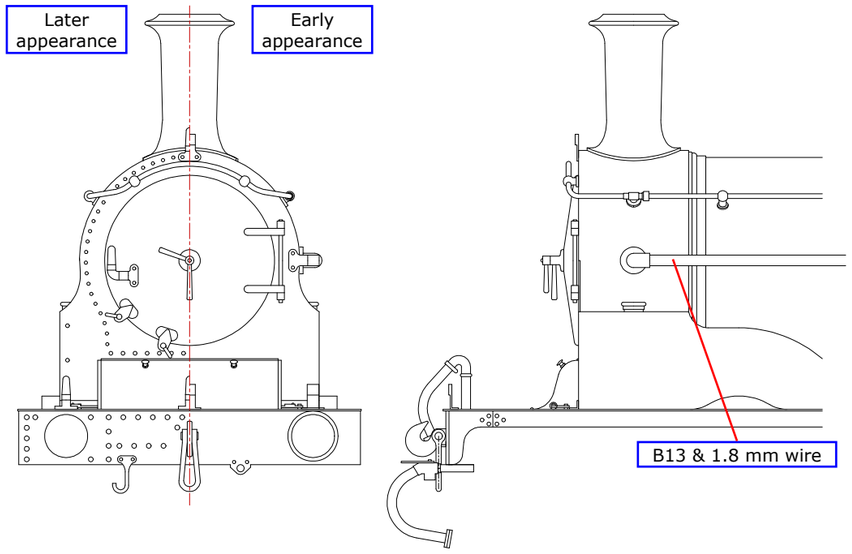


**Fig 17. Long frames, sandboxes combined with splashers, feed water heating**

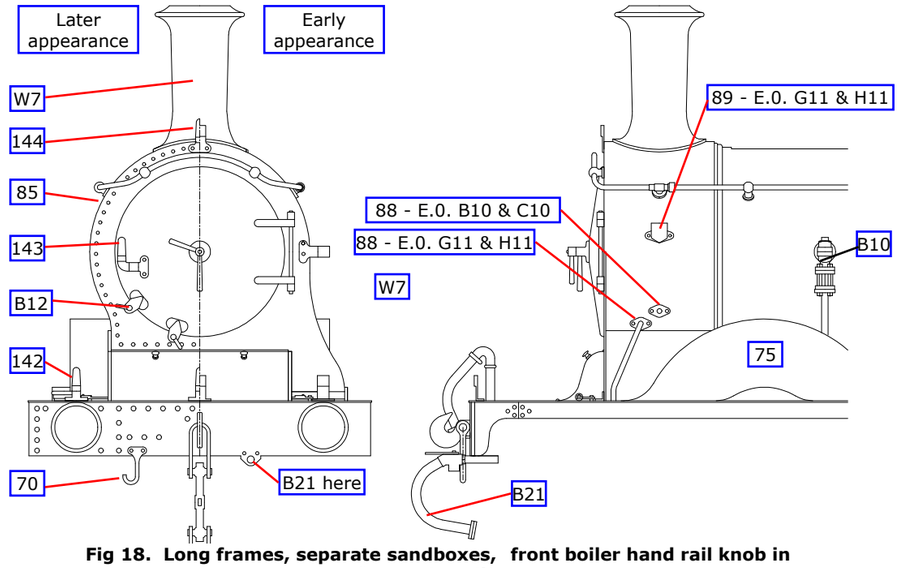


**Fig 18. Long frames, separate sandboxes, front boiler hand rail knob in forward position**

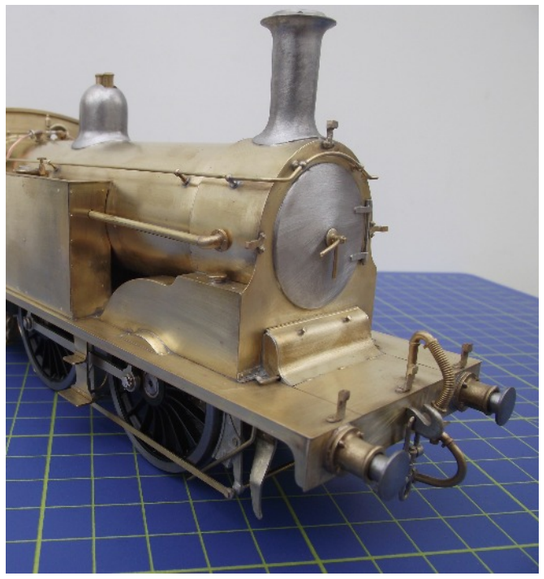

# TANKS

| No. | Description | Sheet | No. | Description | Sheet |
|---|---|---|---|---|---|
| 34 | Cab cut-out beading (2) | 2 | 103 | Tank top beading, feed water heating (2) | 2 |
| 97 | Tank/bunker sides (2) | 3 | 104 | Tank top beading, no feed water heating (2) | 2 |
| 98 | Tank front, no feed water heating (2) | 1 | 105 | Tank top beading, with front handrail (2) | 2 |
| 99 | Tank front, feed water heating (2) | 1 | 106 | Tank top beading right, repositioned handrail | 2 |
| 100 | Tank top (2) | 3 | 107 | Tank/boiler bracket (2) | 2 |
| 101 | Tank top rear angle (2) | 3 | 108 | Tank lifting bracket (2) | 2 |
| 102 | Tank cladding - feed water heating (2) | 3 | 109 | Cab cut-out beading (2) | 2 |

## TANK WITHOUT FEED WATER HEATING (SHORT TANK)

The tank sides (97) and tops (100) are the correct length for the 'long' tanks. For short tanks shorten the sides so that the front (98) fits inside the half etched recess in the side. Similarly, the tank top is broken off along the half etched line.

Drill through the marked holes in the tank front to fit the tank front lubricator (B16). Solder the cab cut-out beading (34 or 109) in place. A tight fit is essential or it will appear to be too long.

Solder the tank front and the tank top in position on the tank side. Now remove the tie across the cab opening. Insert the tank/bunker side into the footplate slots and solder in place. Add the tank top rear angle (101) and the tank top beading. There is a choice between plain beading (104), beading with front hand rails (105) and beading for the right hand side repositioned hand rail (106). If appropriate, add the vertical handrails - the footplate holes are marked underneath. Solder the tank/boiler bracket (107) and the tank lifting bracket (108) into place on the tank top as shown below.

The water fillers (B18) will need a flat filing on one side (not the lids) so that they fit inside the tank side. They must also be fitted before the main handrail.

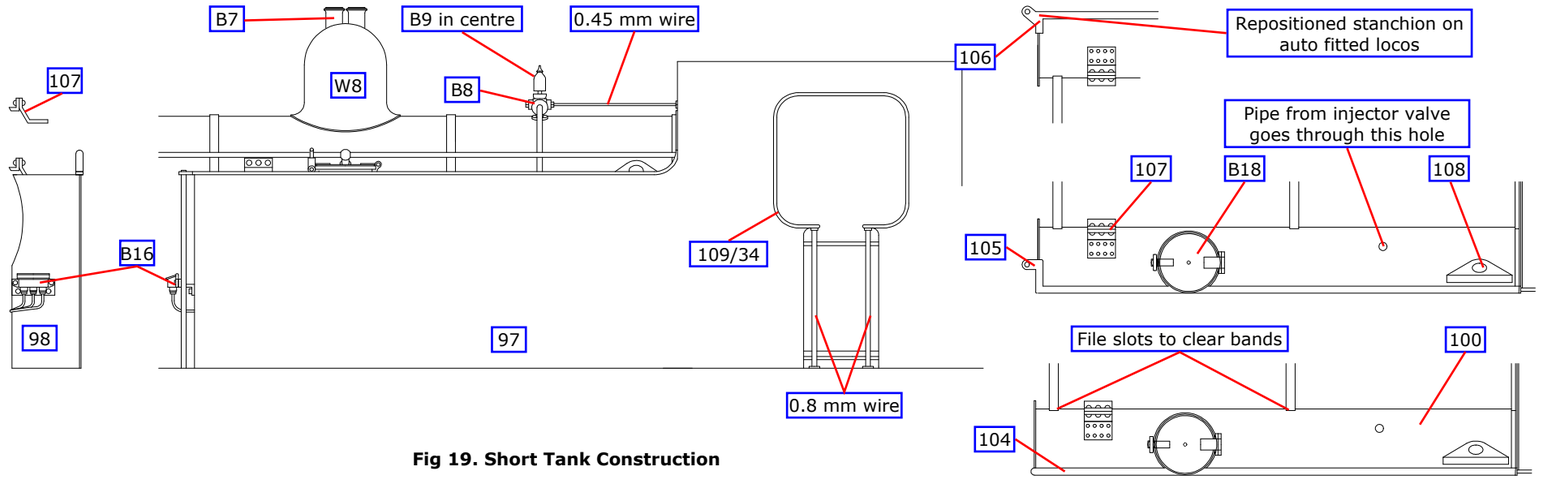


Fig 19. Short Tank Construction

## TANK WITH FEED WATER HEATING (LONG TANK)

The tank sides (97) and tops (100) are the correct length for the 'long' tanks. The 'long' tank front (99) fits with the side inside the half etched recess in the front.

To fit the cladding plates (102) drill out all the marked holes on the tank sides with a 3/16" drill - be careful. This will enable the plates to be tack soldered in position from the inside through these holes. Drill through the marked holes in the tank front to fit the tank front lubricator (B16).

Solder the cab cut-out beading (34 or 109) in place. A tight fit is essential or it will appear to be too long. Solder the tank front and the tank top in position on the tank side.

Now remove the tie across the cab opening. Insert the tank/bunker side (97) into the footplate slots and solder in place. Add the tank top rear angle (101) and the tank top beading (103). Add the tank cladding plates (102). Solder the tank/boiler bracket (107) and the tank lifting bracket (108) into place on the tank top as shown below.

The water fillers (B18) will need a flat filing on one side (not the lids) so that they fit inside the tank side. They must also be fitted before the main handrail.

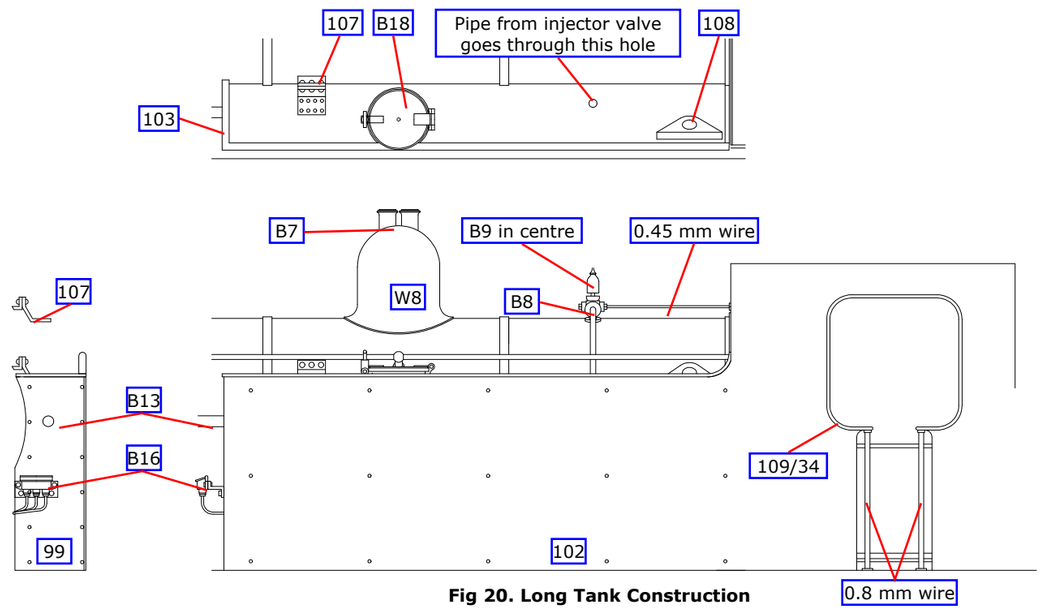


Fig 20. Long Tank Construction

# CAB ROOF & BUNKER

**Cab Roof.** Fold up the back and front of the cab roof building jig (130) to make a solid base upon which to build the removable cab roof.

Roll the cab roof (129) to shape and solder in place on the jig with equal overhang back and front.

Add the front and rear angle (131), the two side angles (132) and the centre angle (133).

Using a carborundum disc in a mini-drill cut through the unwanted part of the former and snap off the redundant parts along the half etched lines. The edges of the formers will now need cleaning up.

**Bunker.** Solder the bunker back (110) in place in the footplate slots.

Form the flare at the top of bunker back overlay (111) and solder in place.

Solder the bunker side beading (114) in place.

Emboss the rivets on the coal rails - open or sheeted (112 or 113) and fold over the stanchions through 180° and solder to the back of the coal rails. If necessary, remove the top two rails before folding the corners and soldering the stanchions in place inside the bunker.

Finally fit the steam heat pipes (B21) and the steam heat pipe valve handles (80).

| No. | Description | Sheet | | | |
|---|---|---|---|---|---|
| 129 | Cab roof | 1 | 113 | Coal rails, sheeted in | 2 |
| 130 | Cab roof building jig | 1 | 114 | Bunker side beading | 2 |
| 131 | Cab roof, front/rear angle (2) | 1 | 134 | LSWR Lamp bracket, footplate (6) | 2 |
| 132 | Cab roof, side angle (2) | 1 | 137 | LSWR Lamp bracket, bunker rear (3) | 2 |
| 133 | Cab roof, centre angle | 1 | 138 | LSWR/SR Lamp bracket, footplate (6) | 2 |
| 80 | Steam heat pipe valve handle (2) | 2 | 141 | LSWR/SR Lamp bracket, bunker rear (3) | 2 |
| 110 | Bunker back | 2 | 142 | SR Lamp bracket, footplate (6) | 2 |
| 111 | Bunker back overlay | 1 | 144 | SR Lamp bracket, smokebox top & bunker rear (4) | 2 |
| 112 | Coal rails, open | 2 | | | |

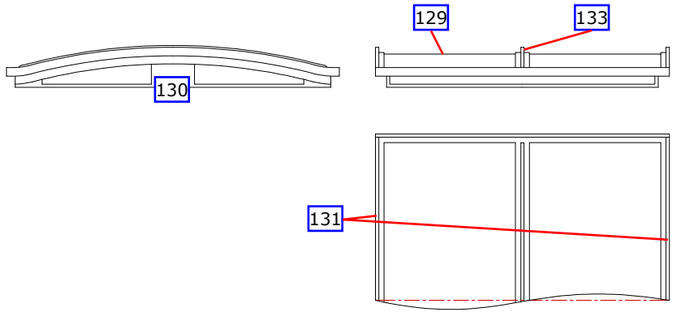


**Fig 21. Cab Roof Construction**

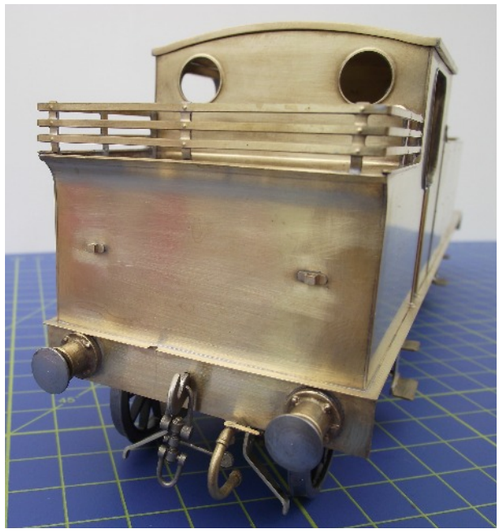

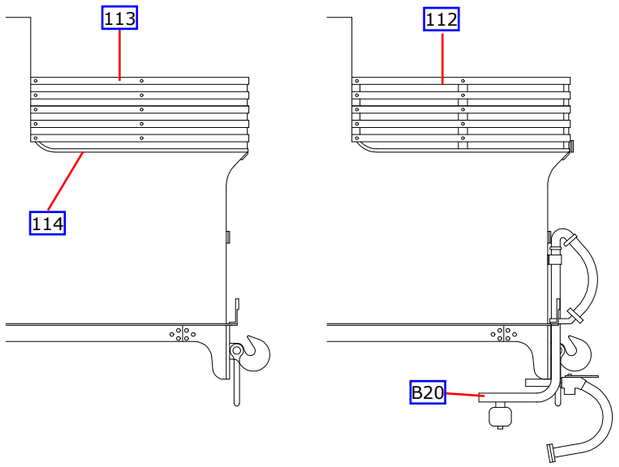


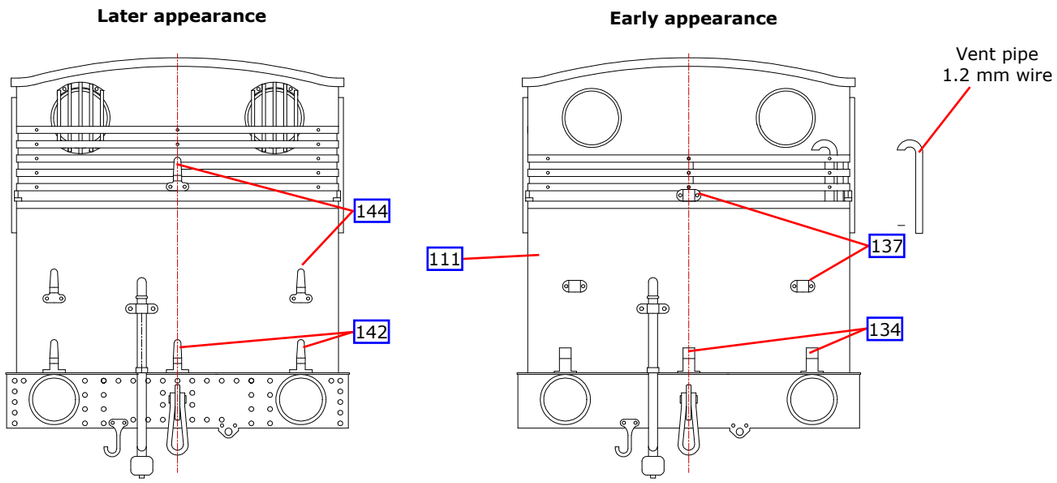


**Fig 22. Bunker Construction**

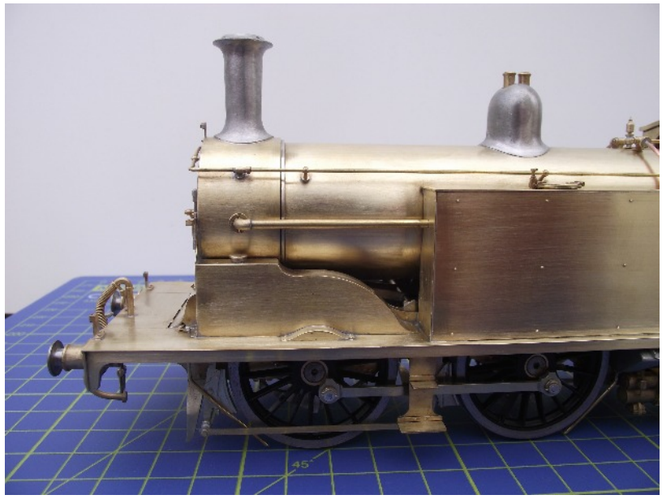

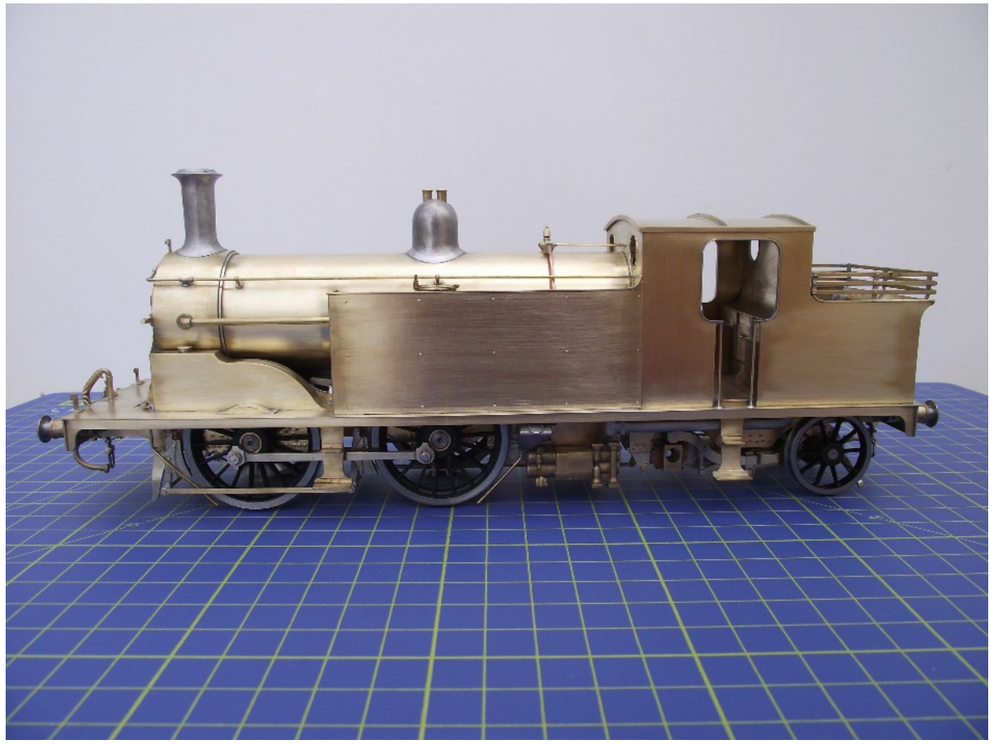

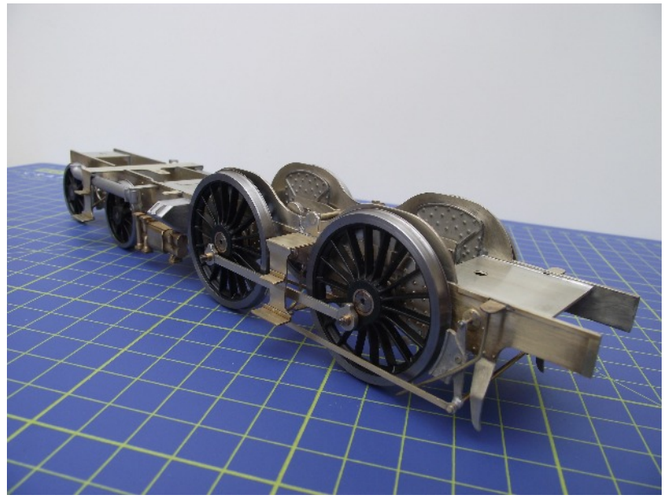

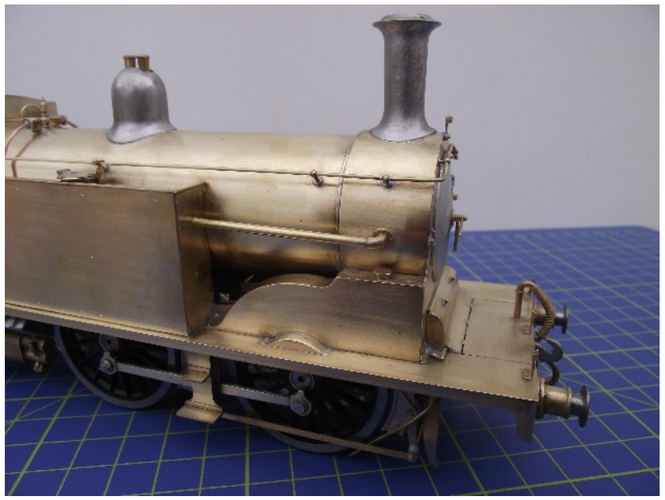

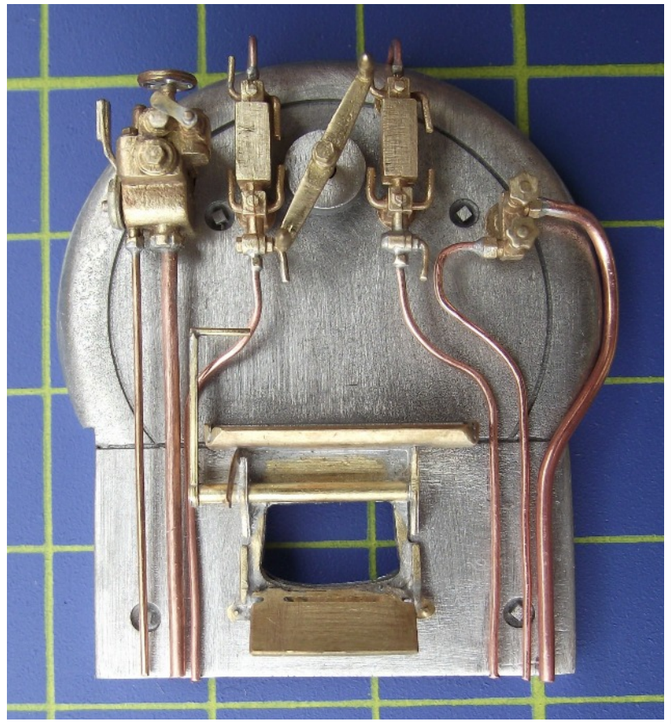

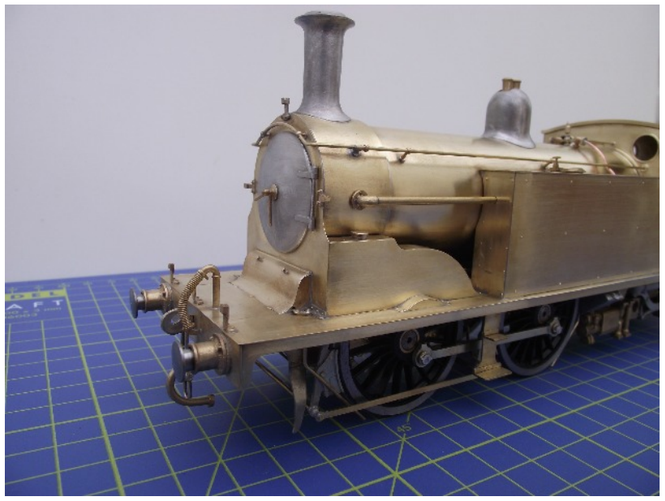

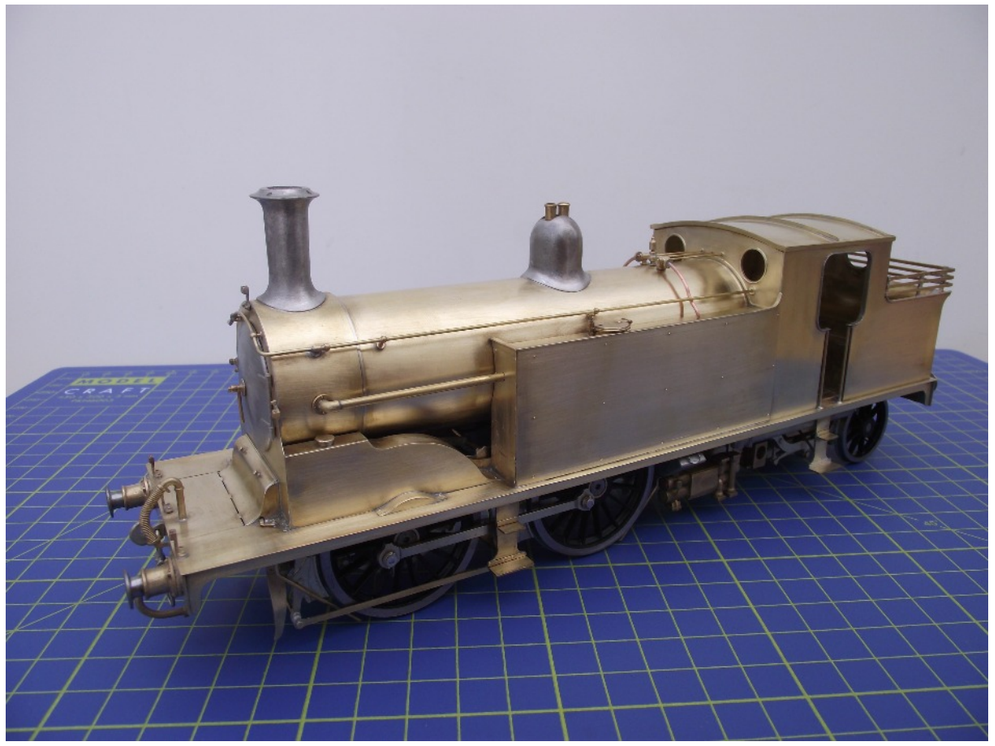

## ETCHED PARTS M7A - SHEET 1

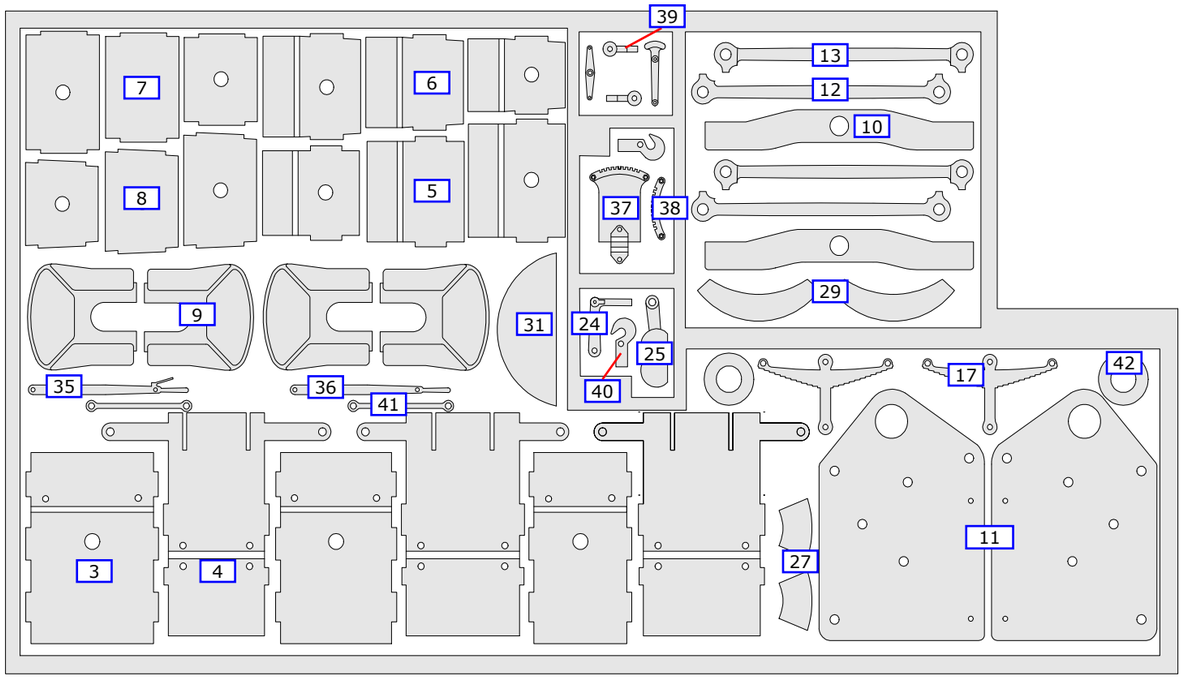


## ETCHED PARTS M7B - SHEET 1

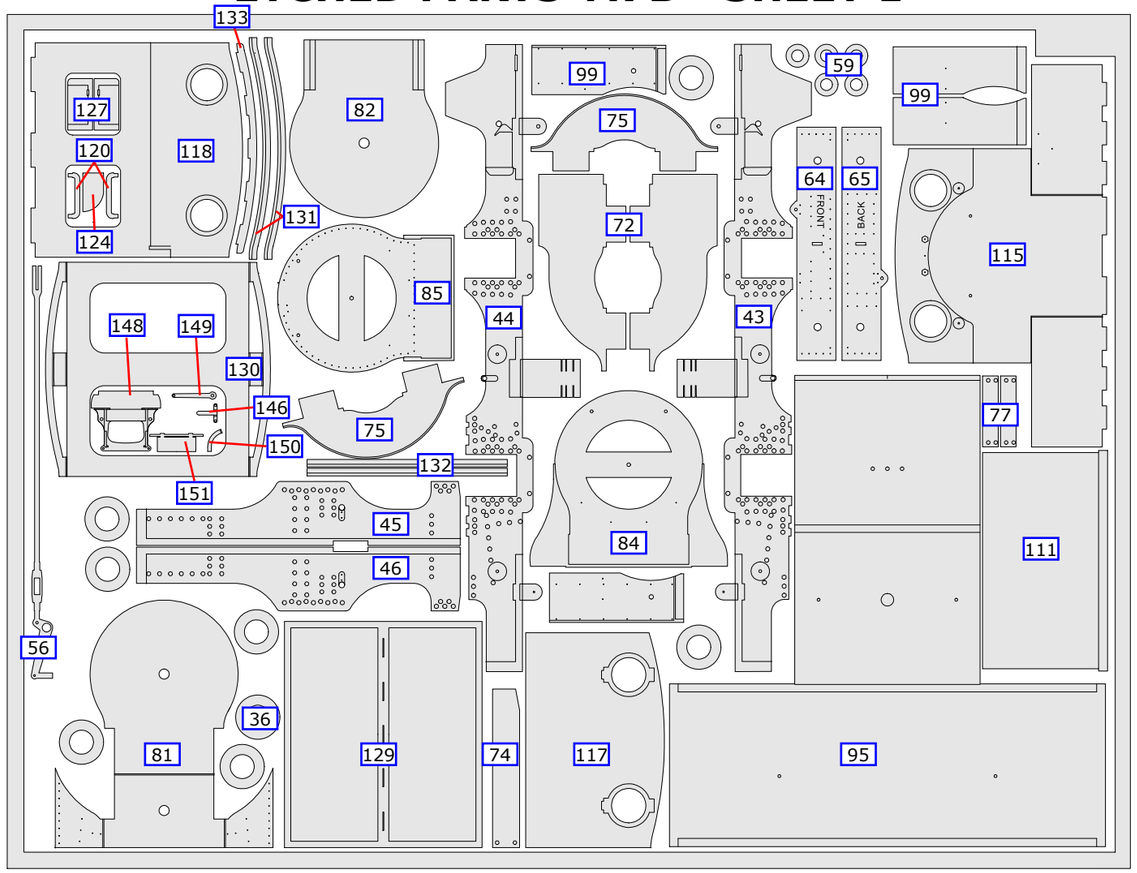


## ETCHED PARTS M7A - SHEET 2

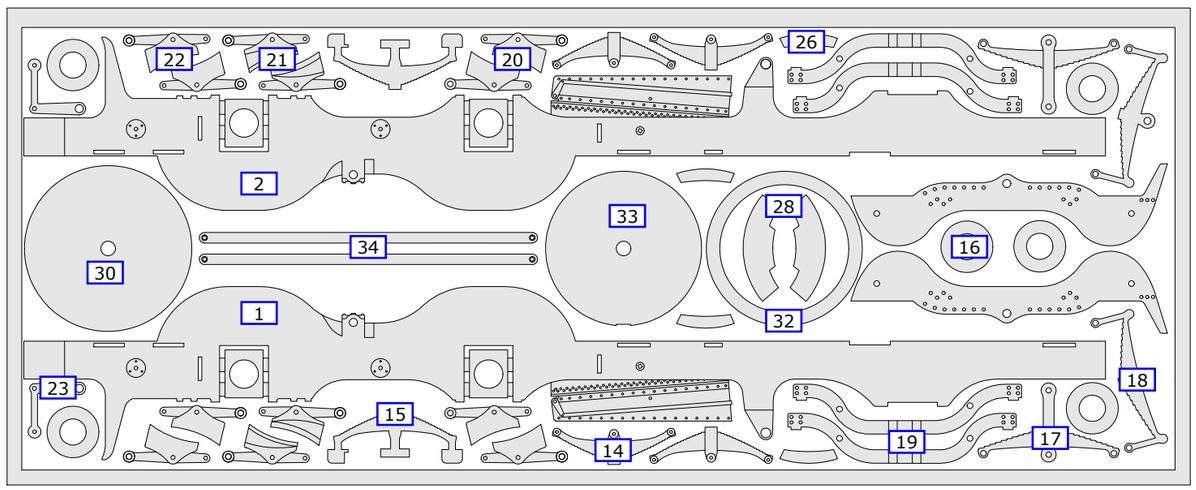

## ETCHED PARTS M7B - SHEET 2

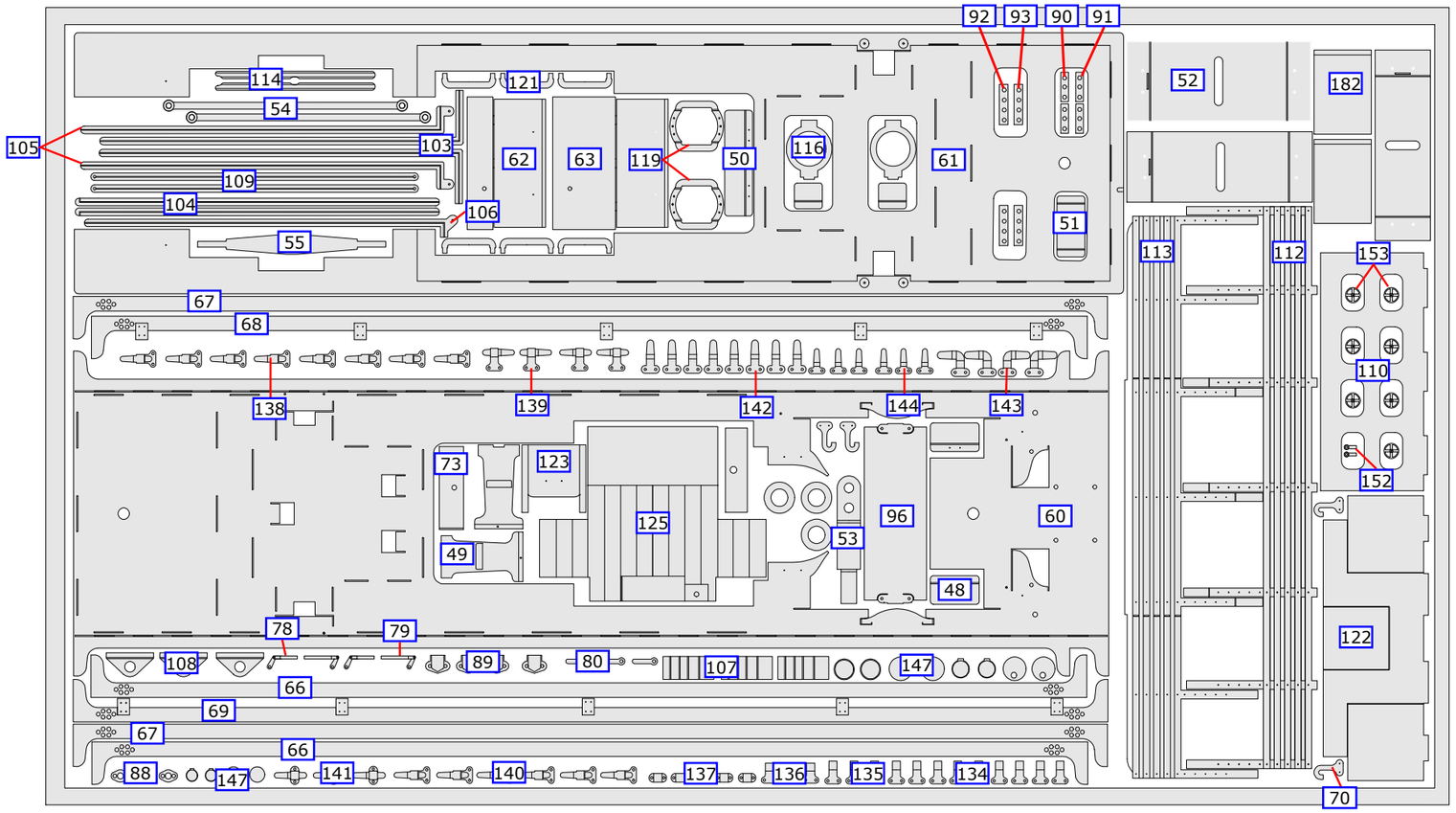


## ETCHED PARTS M7B - SHEET 3

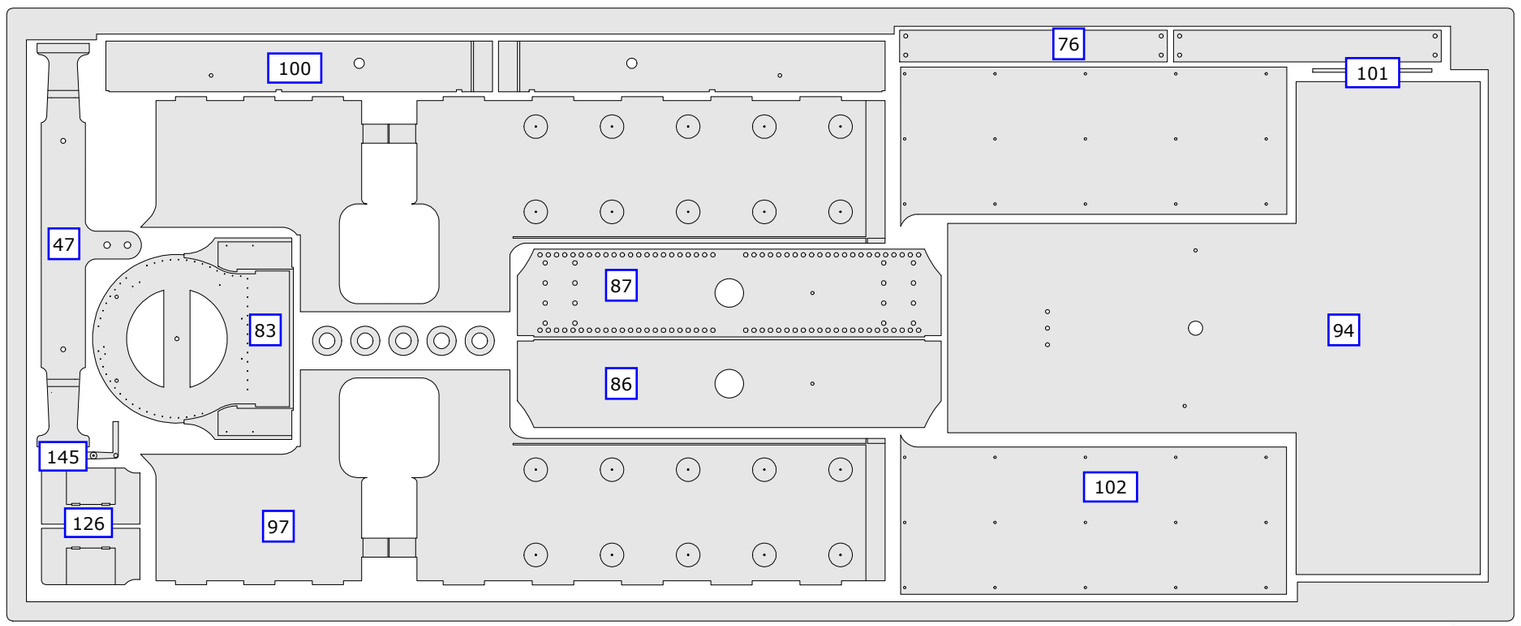

# LOST WAX CASTINGS


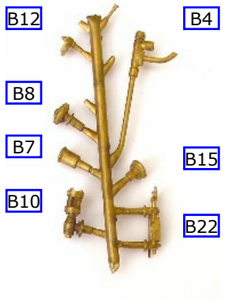


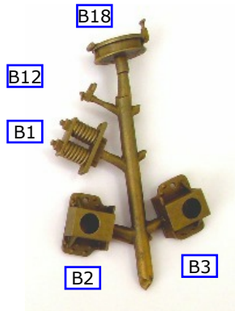



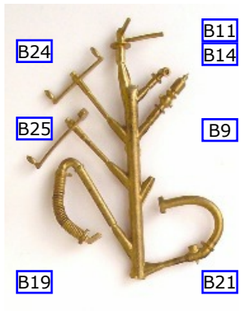




| No. | Description | No. In kit |
|---|---|---|
| B1 | Rear axle springs | 2 |
| B2 | Bogie axle box, left | 2 |
| B3 | Bogie axlebox, right | 2 |
| B4 | Injector | 2 |
| B5 | Duplex pump, left | 1 |
| B6 | Duplex pump, right | 1 |
| B7 | Safety valves | 2 |
| B8 | Injector valves | 2 |
| B9 | Whistle | 1 |
| B10 | Clack box | 2 |

| No. | Description | No. In kit |
|---|---|---|
| B11 | Smokebox door handle | |
| B12 | Smokebox door dog | 4 |
| B13 | Feed water heater pipe elbow | 2 |
| B14 | Blower valve | 1 |
| B15 | Sandbox lid | 2 |
| B16 | Lubricator, tank front | 2 |
| B17 | Cylinder cover knob | 2 |
| B18 | Water filler | 2 |
| B19 | Vacuum pipe, front | 1 |
| B20 | Vacuum pipe rear | 1 |

| No. | Description | No. In kit |
|---|---|---|
| B21 | Steam heating pipe | 2 |
| B22 | Water gauge | 2 |
| B23 | Ejector/brake | 1 |
| B24 | Regulator handle, original | 1 |
| B25 | Regulator handle, later | 1 |
| B26 | Steam heating valve | 1 |
| B27 | Reversing lever, steam reverse | 1 |
| B28 | Brake column handle | 1 |

# WHITEMETAL CASTINGS


| No. | Description | No. In kit |
|---|---|---|
| W1 | Rear sandbox, left | 1 |
| W2 | Rear sandbox, right | 1 |
| W3 | Front sandbox, left | 1 |
| W4 | Front sandbox, right | 1 |
| W5 | Tank balance pipe | 2 |
| W6 | Chimney, short frame (Wide) | 1 |
| W7 | Chimney, long frame (Narrow) | 1 |
| W8 | Dome | 1 |
| W9 | Inside of dome | 1 |
| W10 | Smokebox door | 1 |
| W11 | Backplate | 1 |
| W12 | Brake Column | 1 |

## OTHER COMPONENTS FOR CHASSIS

3/16" bearing (4)
6 BA screw (4)
6 BA nut (3)
1/8" Brass wire
5/32" OD Brass tube
0.8 mm Brass wire
1.2 mm Brass wire
1.6 mm Brass wire
1.8 mm Brass wire
2.0 mm Brass wire
0.5 mm Spring wire

## OTHER COMPONENTS FOR BODY

0.45 mm Brass wire
0.8 mm Brass wire
1.2 mm Brass wire
1.8 mm Brass wire
0.8 mm Copper wire
1.2 mm Copper wire
Handrail knob - short (3)
Handrail knob - medium (4)